## HORN

Fig. 1: Horn Circuit

## POWER DOOR LOCKS

Fig. 2: Power Door Lock Circuit

## POWER WINDOWS

Fig. 3: Power Windows Circuit

## RADIO

Fig. 4: Radio Circuits

## STARTING/CHARGING

### 4.9L

Fig. 5: 4.9L, Charging Circuit

Fig. 6: 4.9L, Starting Circuit

### 5.0L

Fig. 7: 5.0L, Charging Circuit

Fig. 8: 5.0L, Starting Circuit

### 5.8L

Fig. 9: 5.8L, Charging Circuit

Fig. 10: 5.8L, Starting Circuit

### 7.3L

Fig. 11: 7.3L, Charging Circuit

Fig. 12: 7.3L, Starting Circuit

### 7.5L

Fig. 13: 7.5L, Charging Circuit

Fig. 14: 7.5L, Starting Circuit

## WIPER/WASHER

Fig. 15: 2-Speed Wiper/Washer Circuit

Fig. 16: Interval Wiper/Washer Circuit

## PART 2

Fig. 1: Engine Compartment & Headlights (Grids 1-3)

Fig. 2: Electronic Engine Control (EEC) (4.9L) (Grids 4-7)

Fig. 3: Electronic Engine Control (EEC) (5.0L & 5.8L EFI) (Grids 8-11)

Fig. 4: Electronic Engine Control (EEC) (7.5L EFI) (Grids 12-15)

Fig. 5: Transmisssion Electronic Control Assembly (TECA) (Diesel W/ E4OD) (Grids 16-19)

Fig. 6: Fuse Block (Grids 20-23)

Fig. 7: Clutch Interlock, Cruise Control & Wiper/Washer (Grids 24-27)

Fig. 8: Instrument Cluster & A/C Heater Function (Grids 28-31)

Fig. 9: Electronic Shift Control & Passenger Compartment (Grids 32-35)

Fig. 10: Passenger Compartment & Taillights (Grids 36-39)

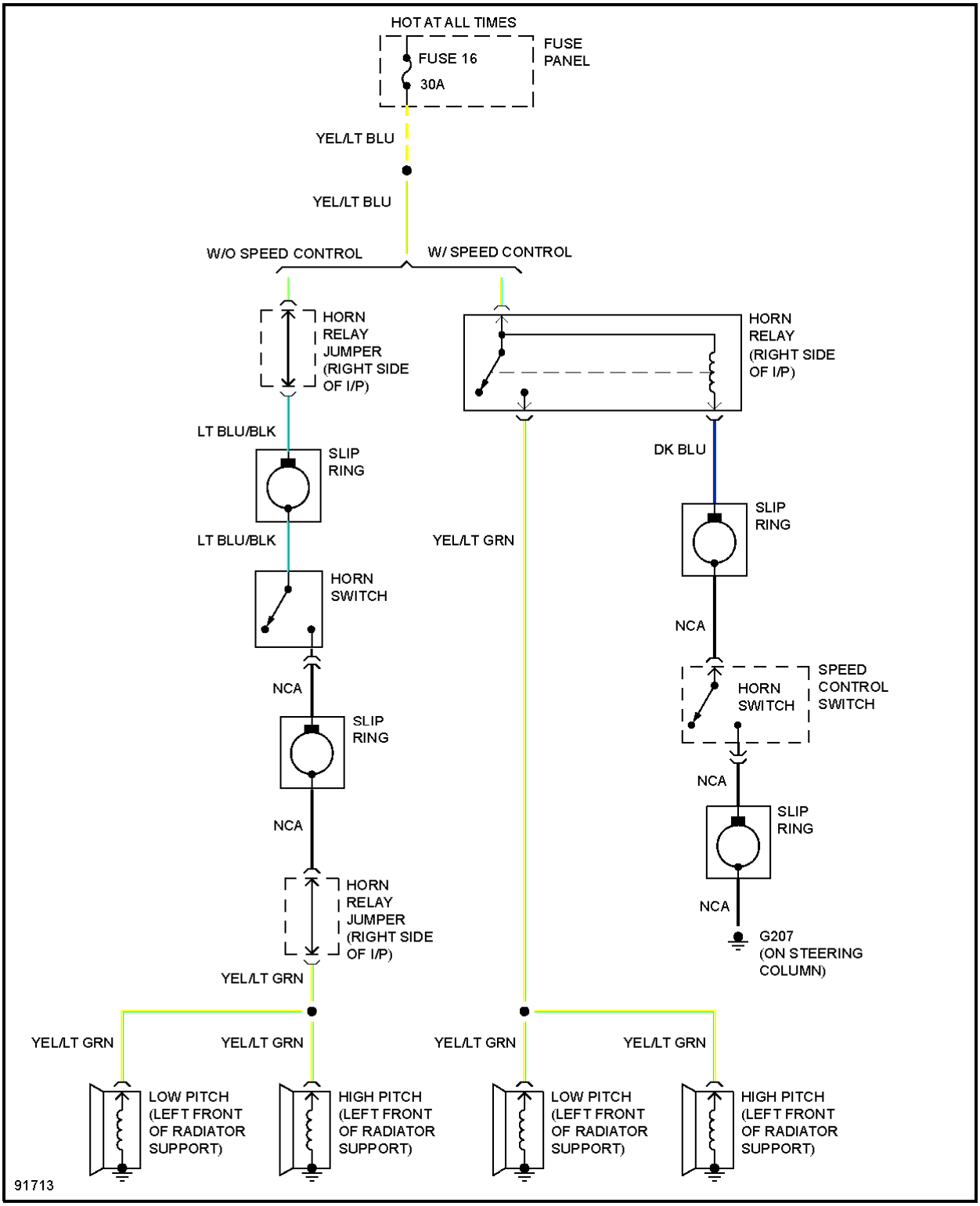


**Fig. 1: Horn Circuit**

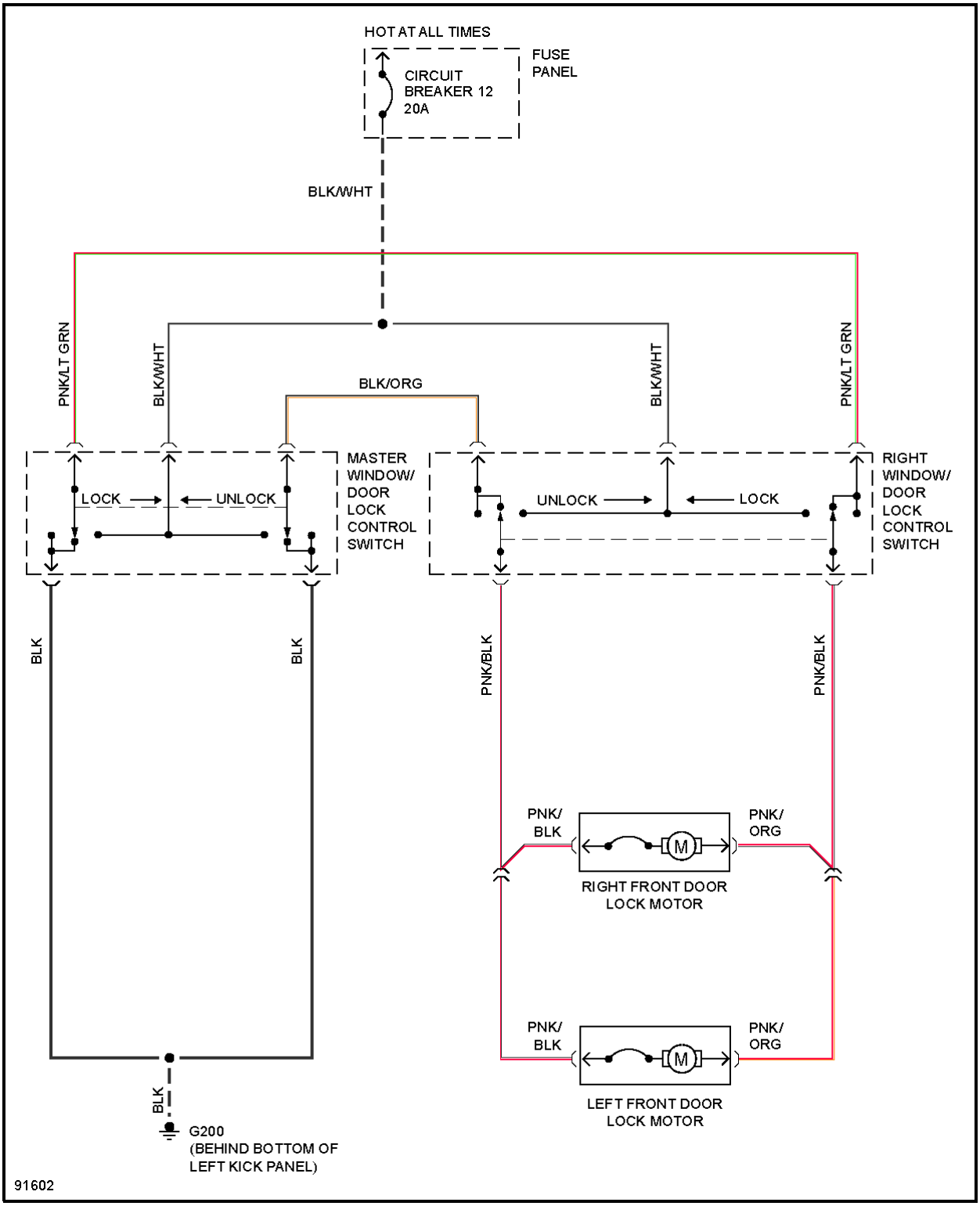


**Fig. 2: Power Door Lock Circuit**

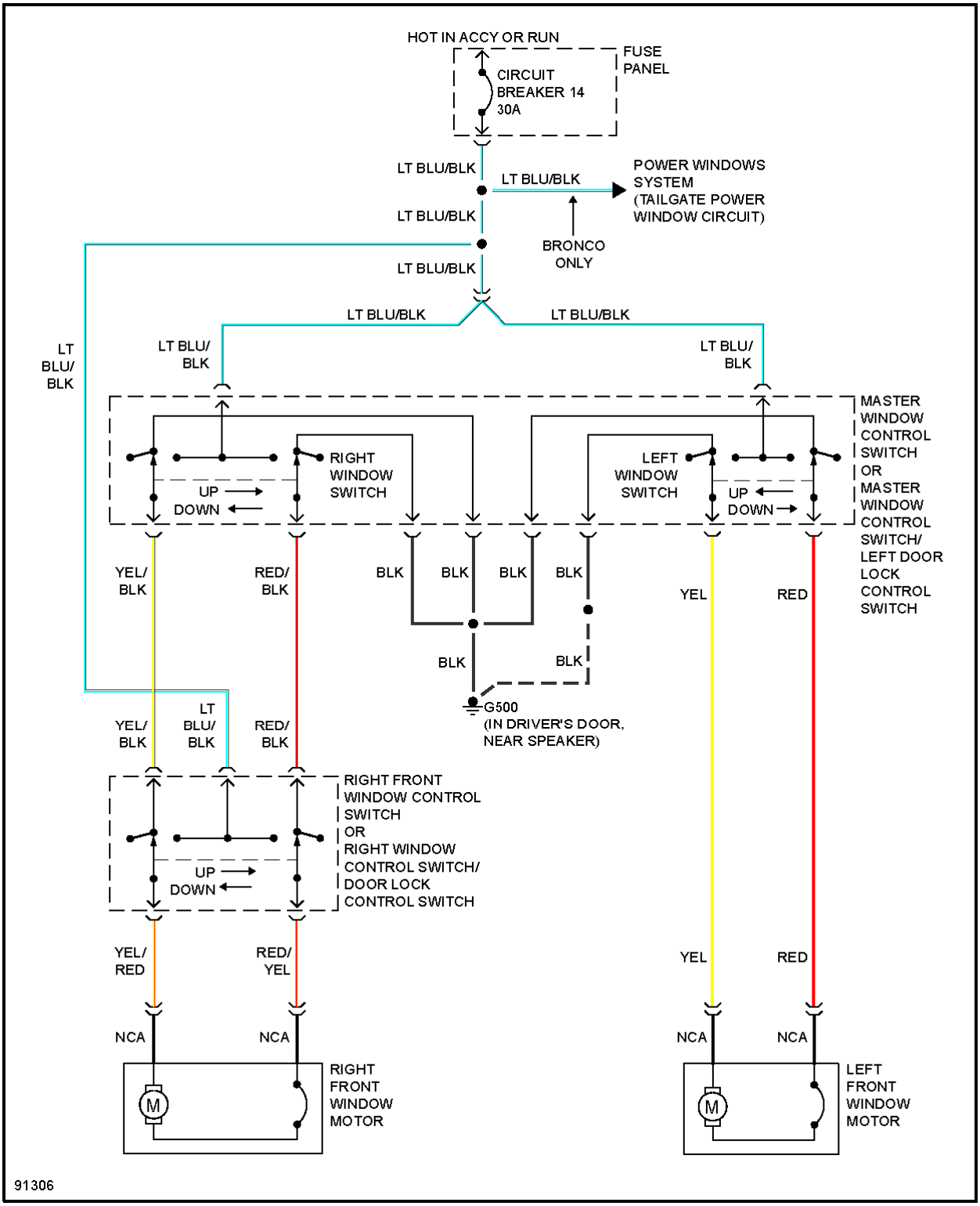


**Fig. 3: Power Windows Circuit**

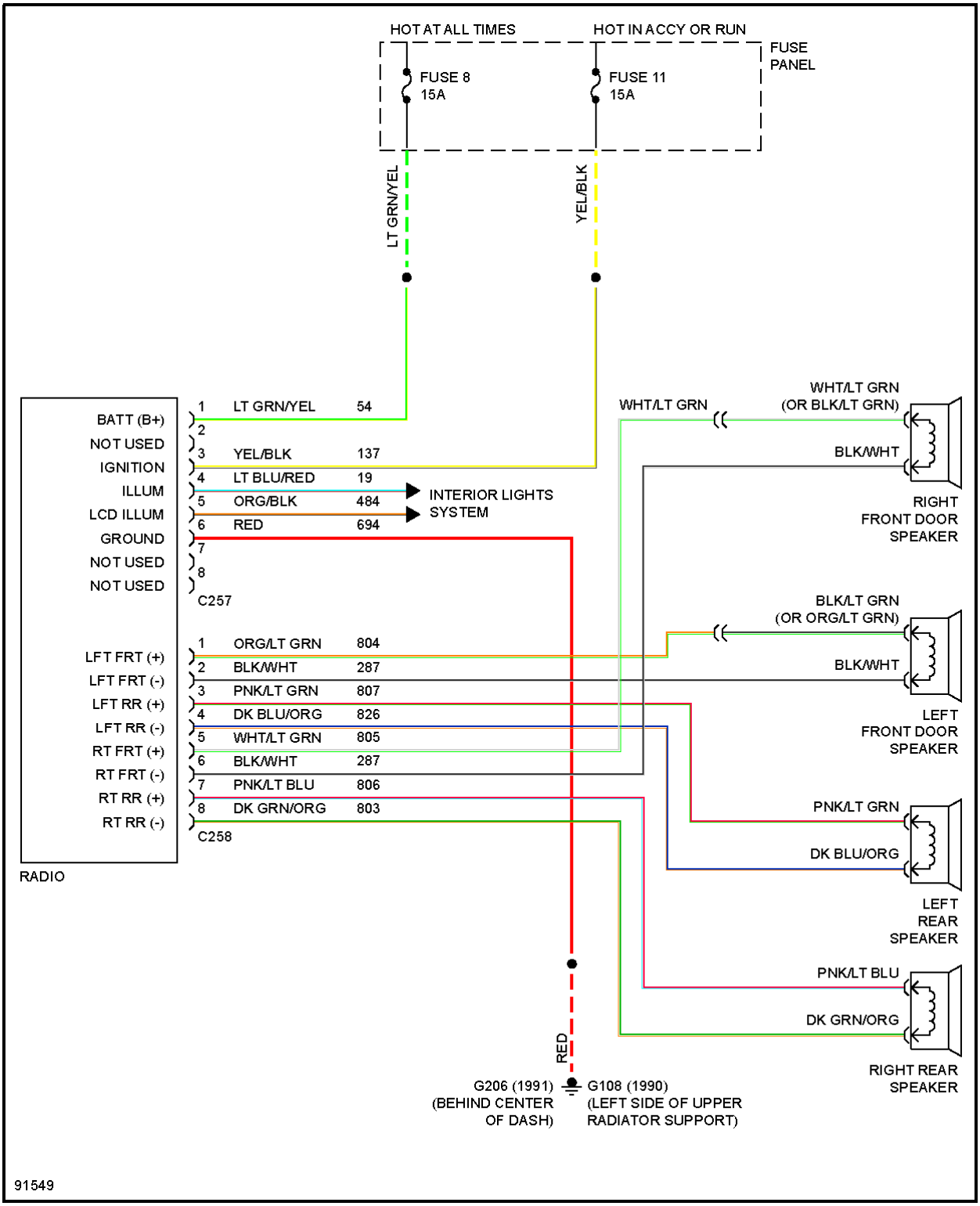


**Fig. 4: Radio Circuits**

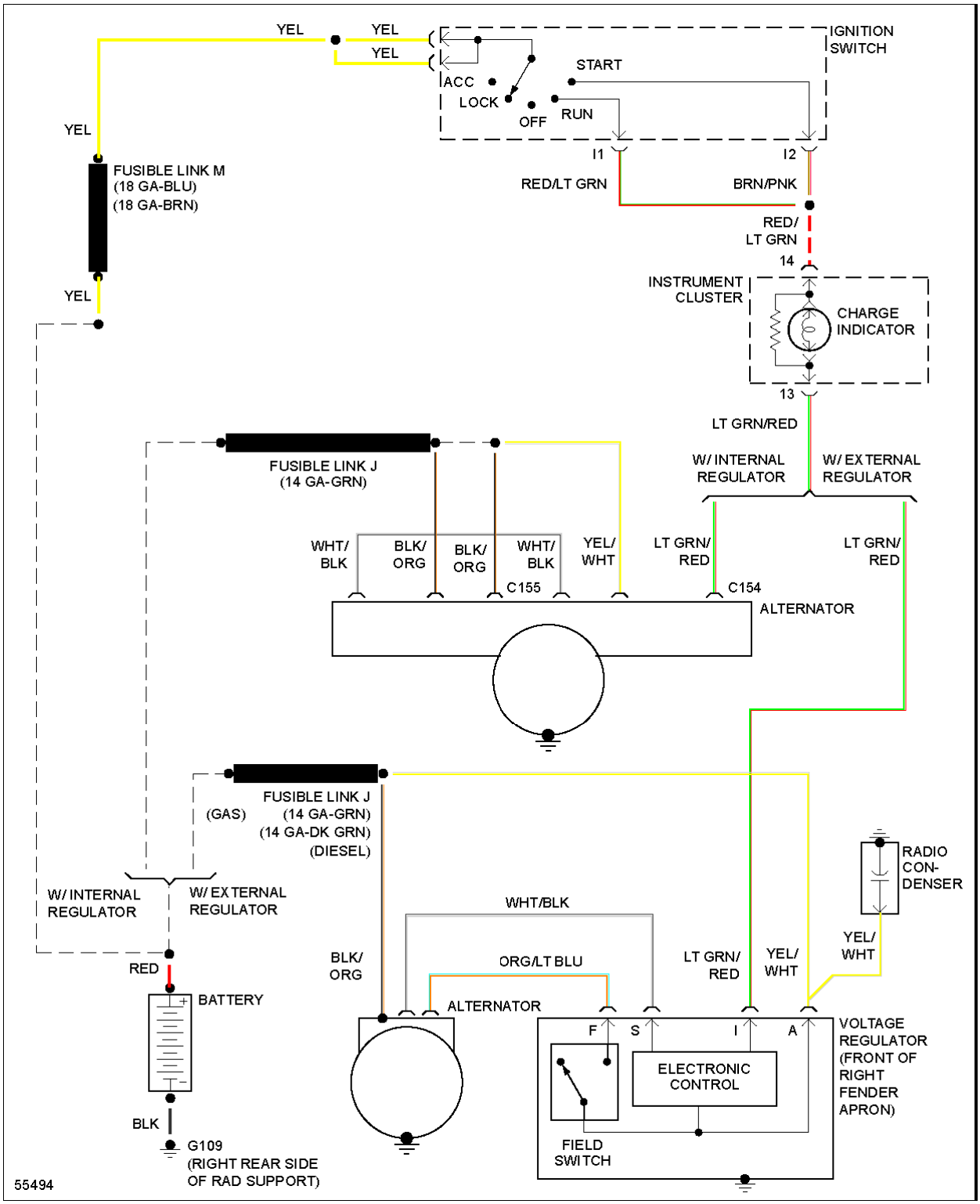


**Fig. 5: 4.9L, Charging Circuit**

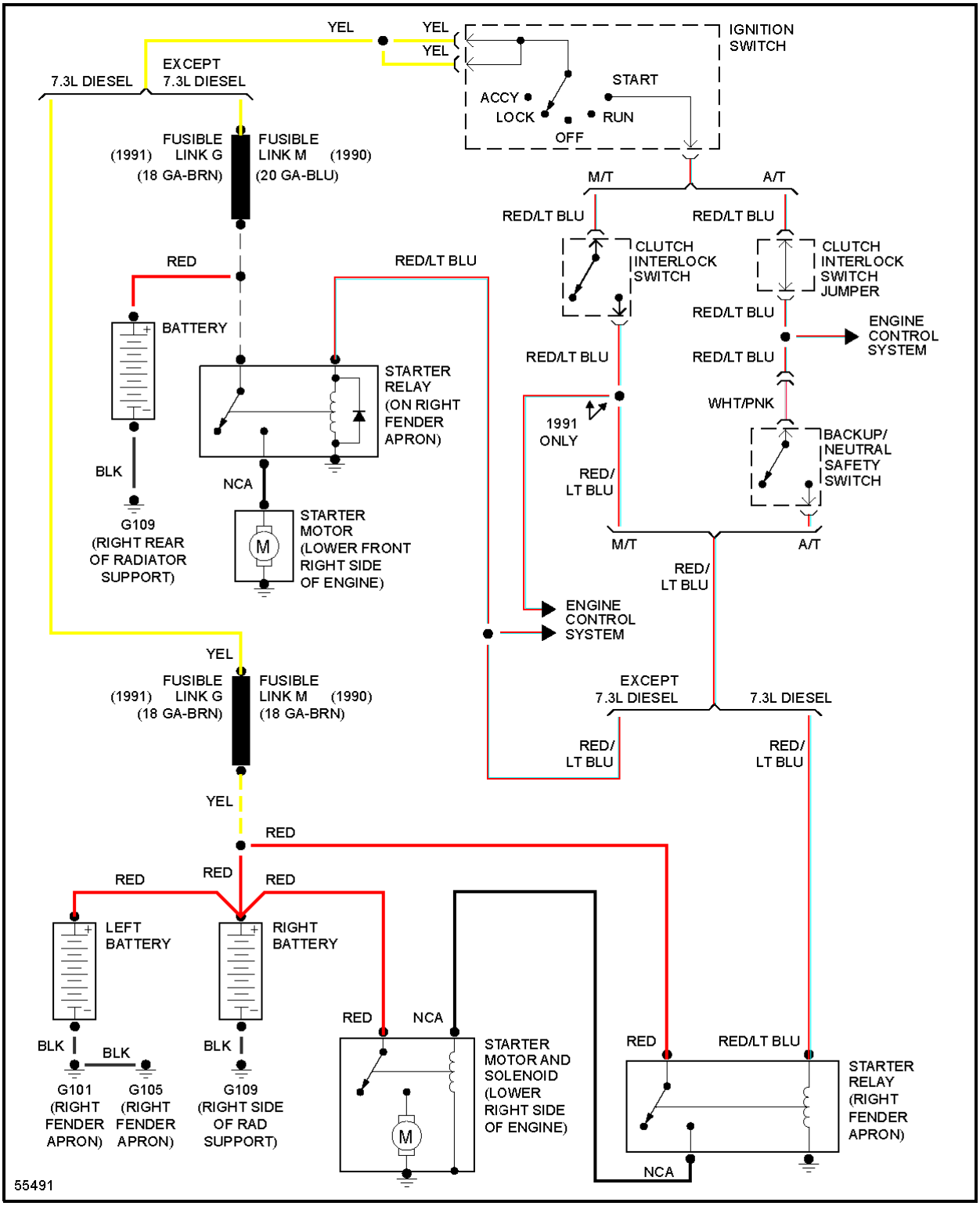


**Fig. 6: 4.9L, Starting Circuit**

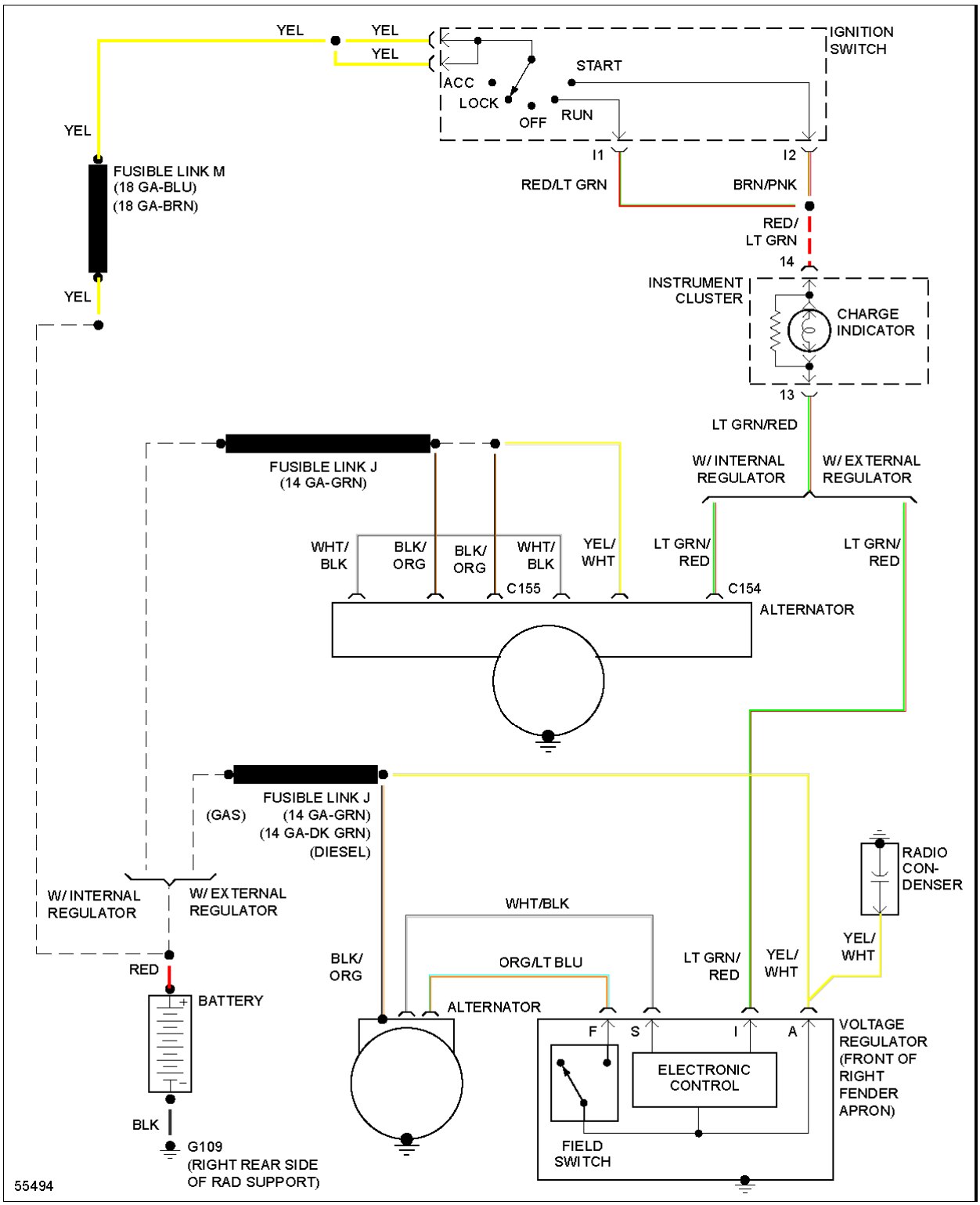


**Fig. 7: 5.0L, Charging Circuit**

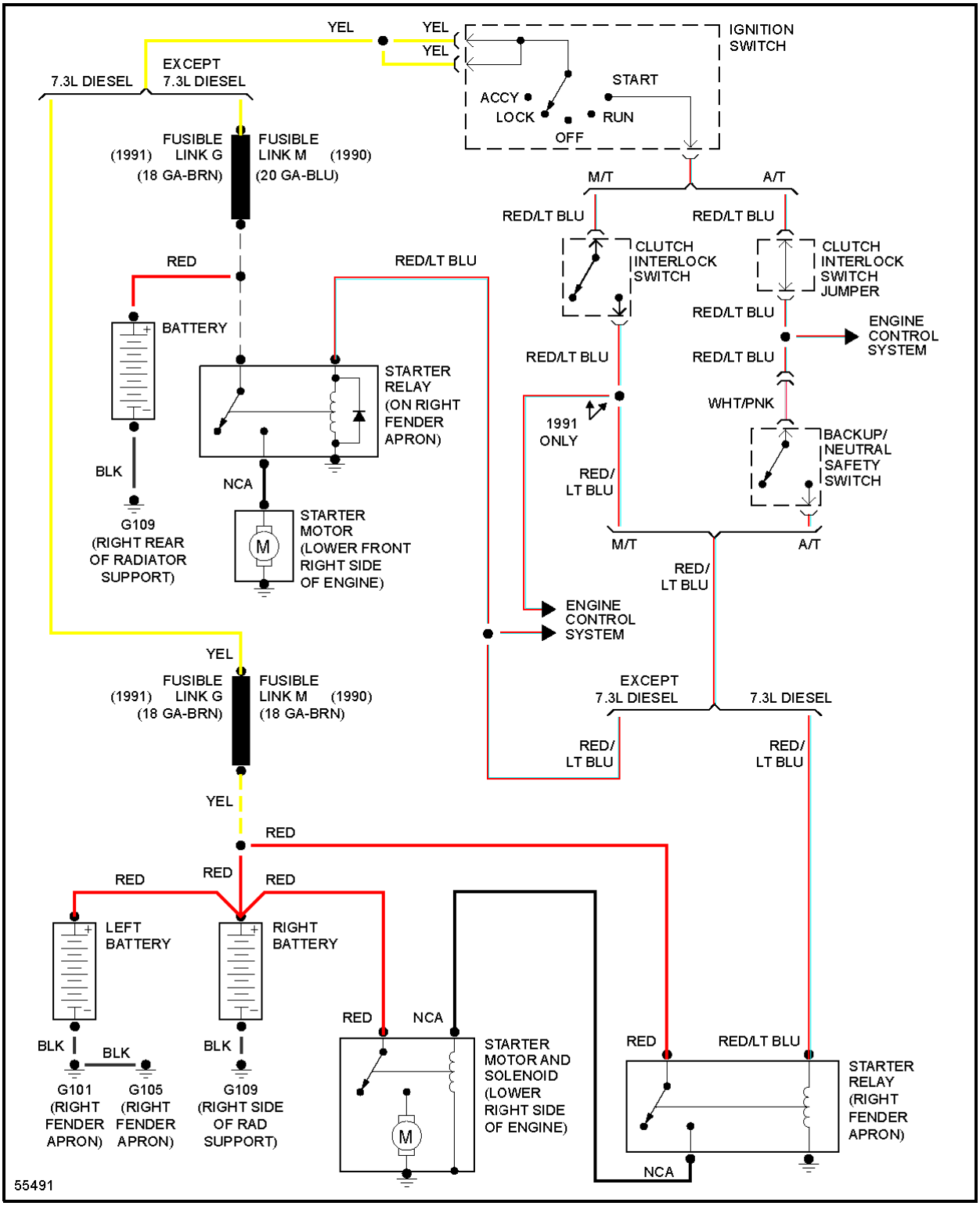


**Fig. 8: 5.0L, Starting Circuit**

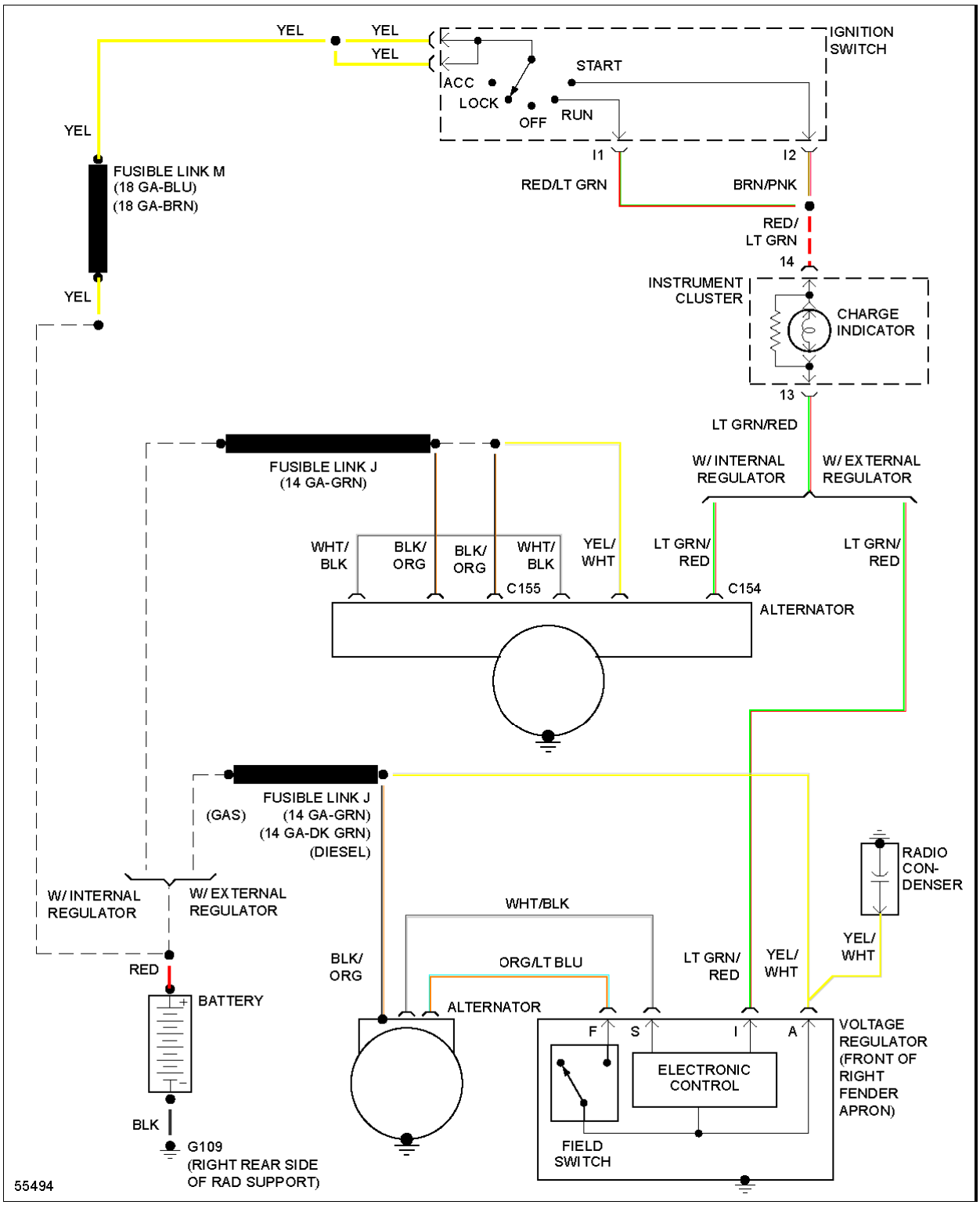


**Fig. 9: 5.8L, Charging Circuit**

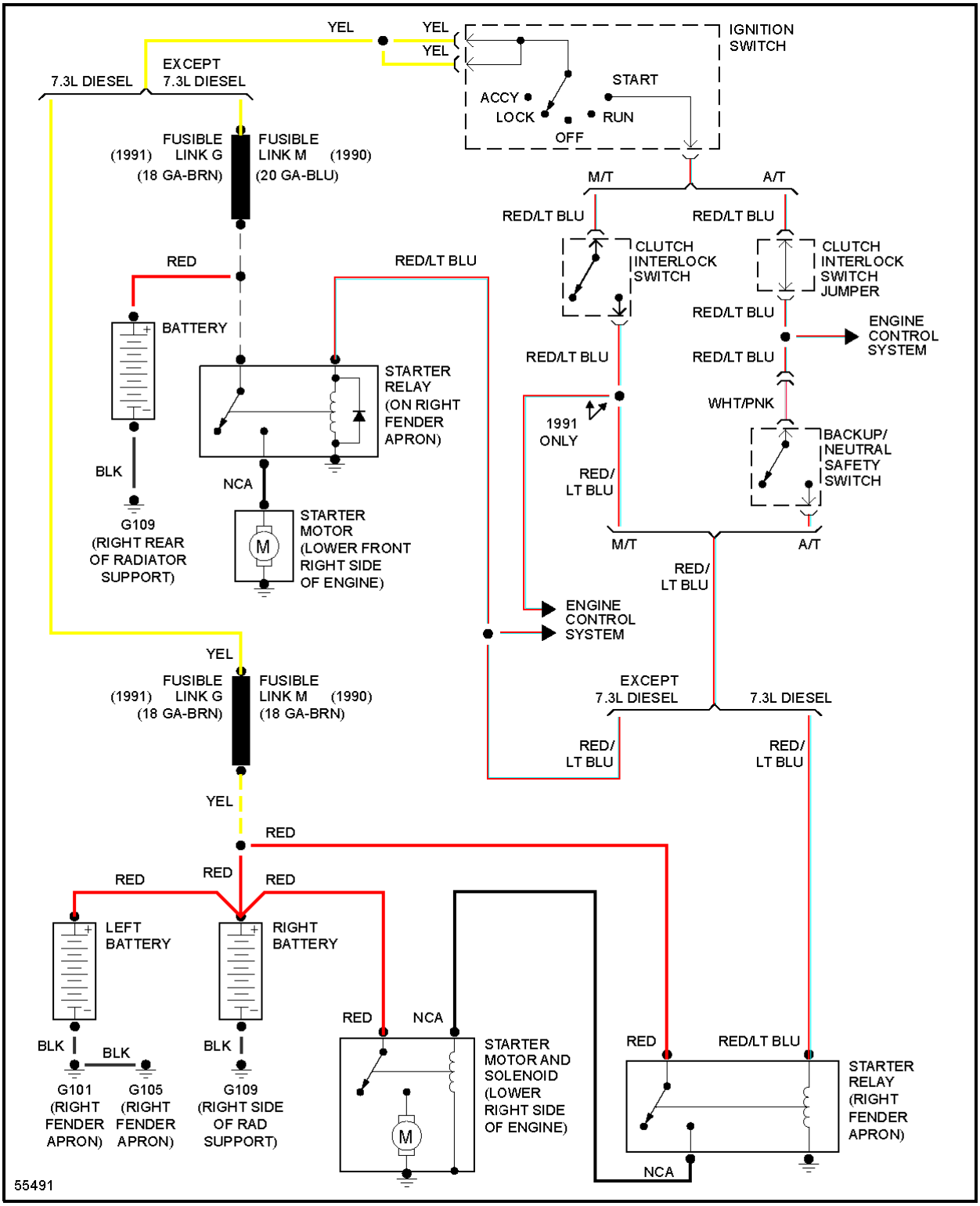


**Fig. 10: 5.8L, Starting Circuit**

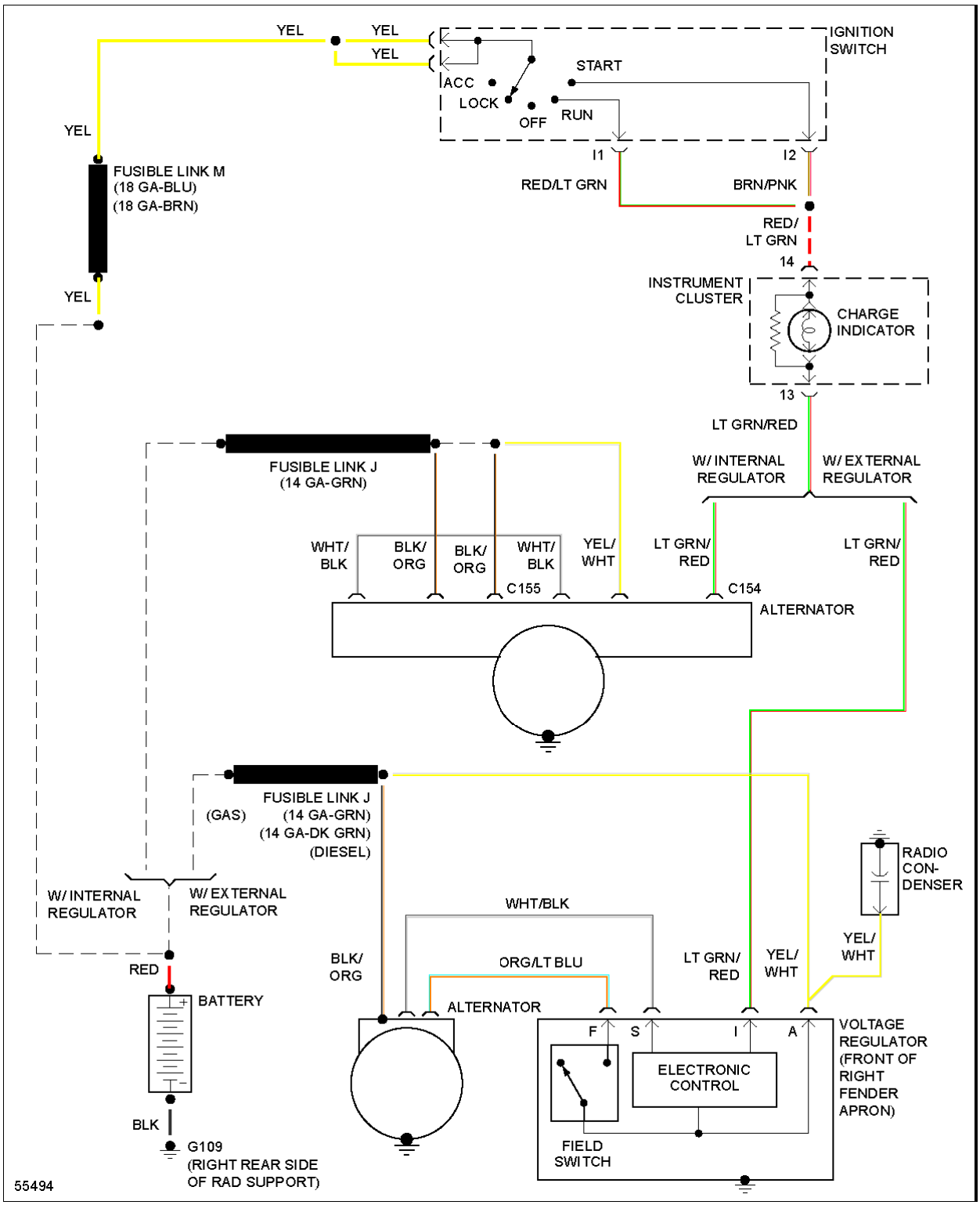


**Fig. 11: 7.3L, Charging Circuit**

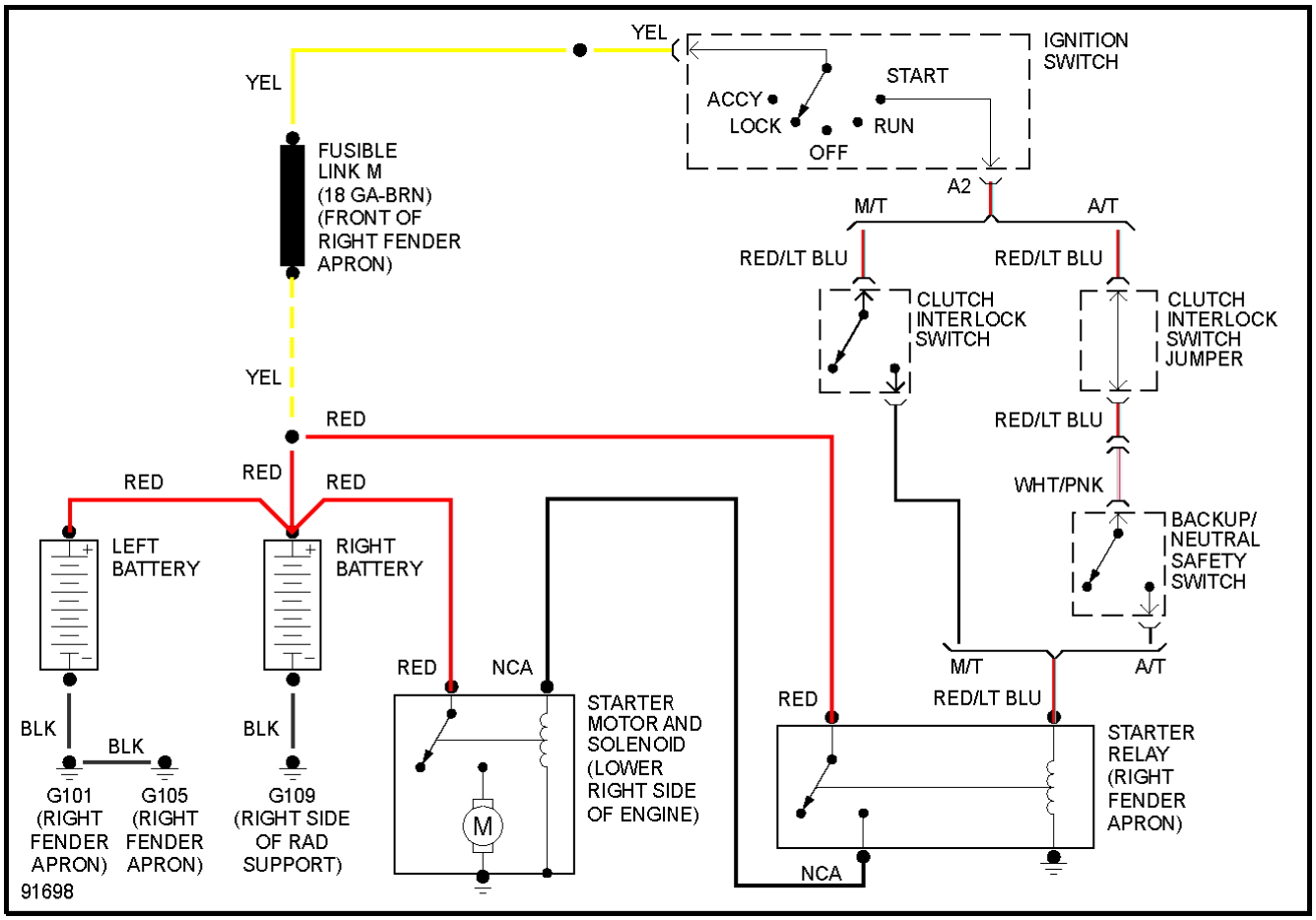


**Fig. 12: 7.3L, Starting Circuit**

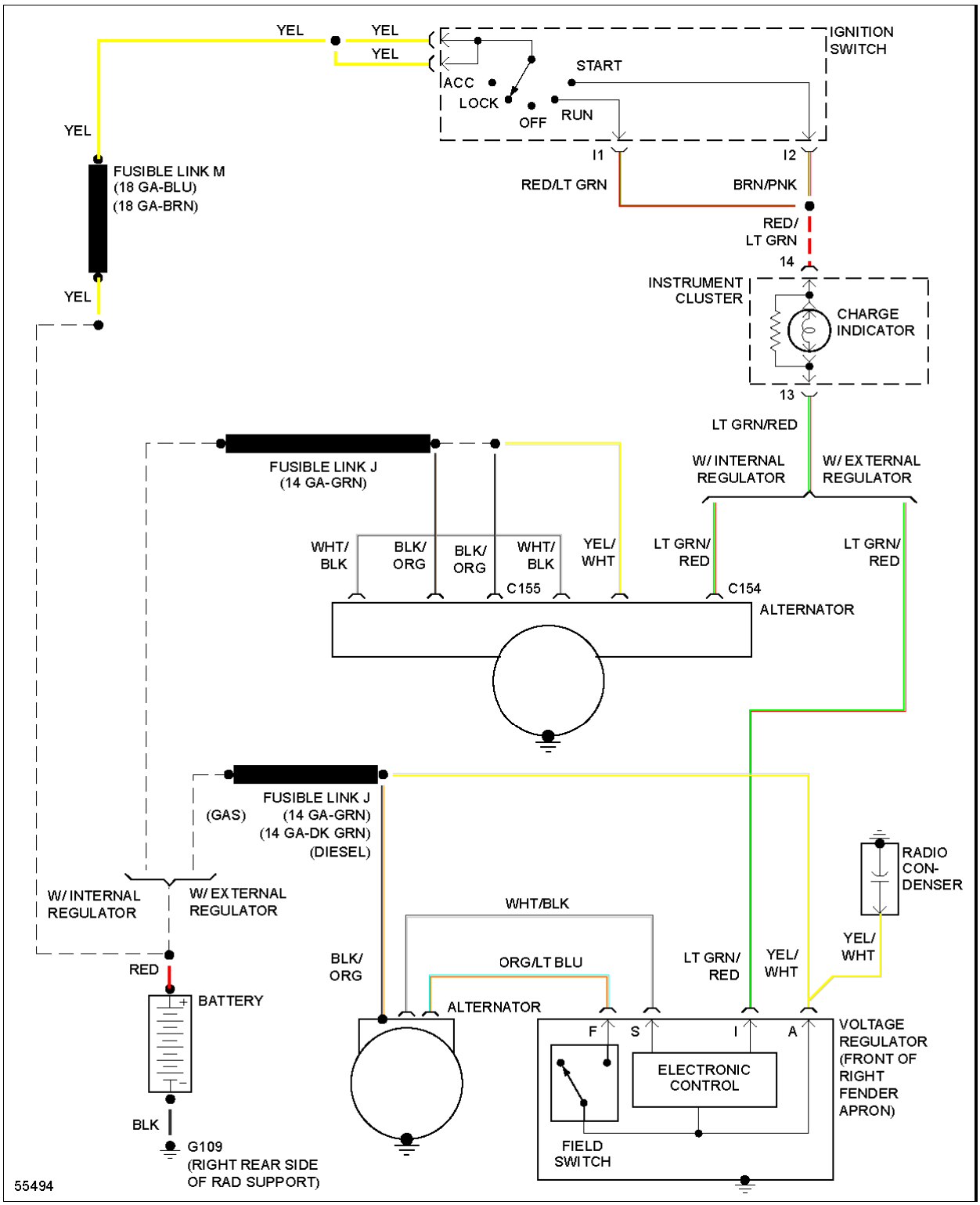


**Fig. 13: 7.5L, Charging Circuit**

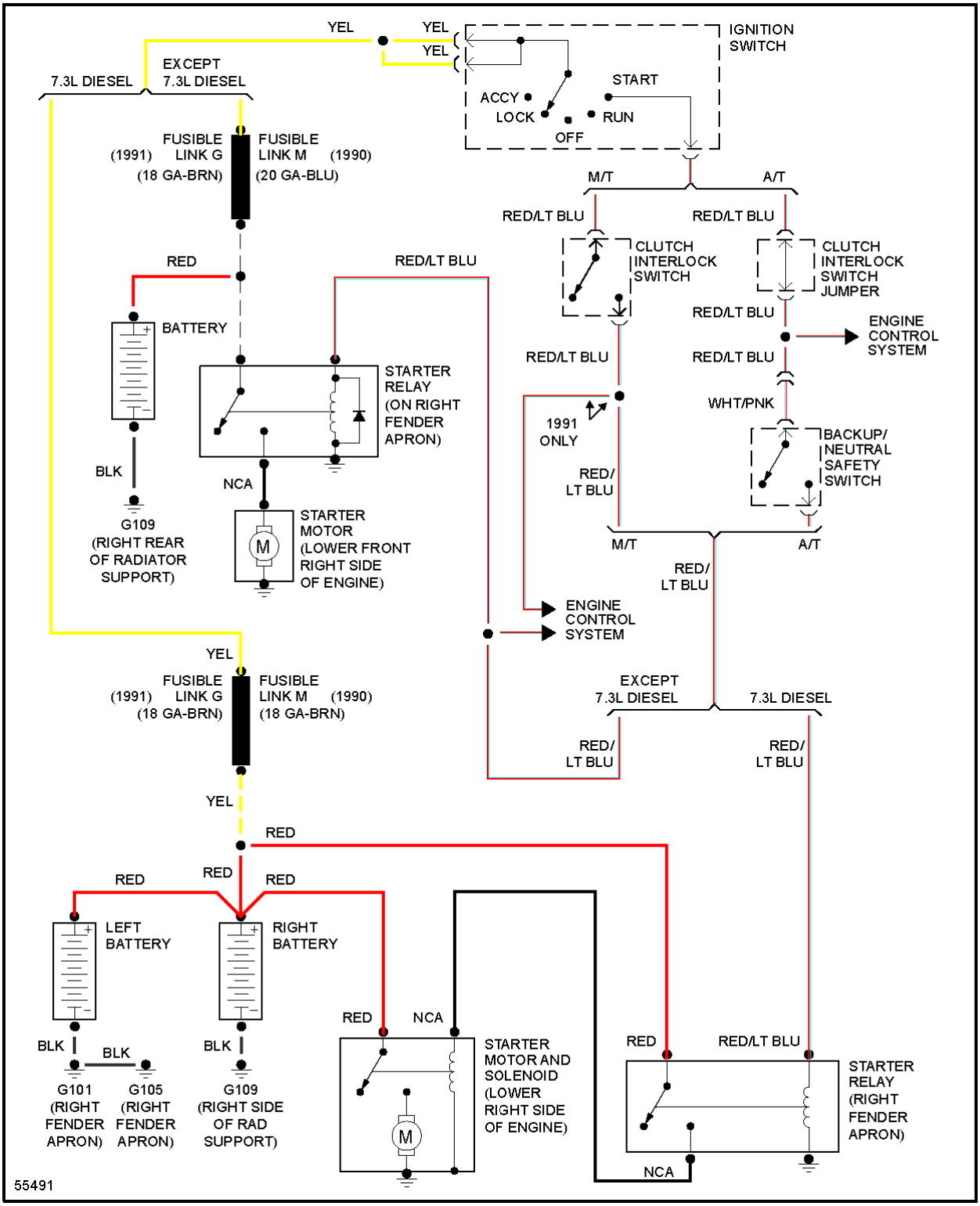


**Fig. 14: 7.5L, Starting Circuit**

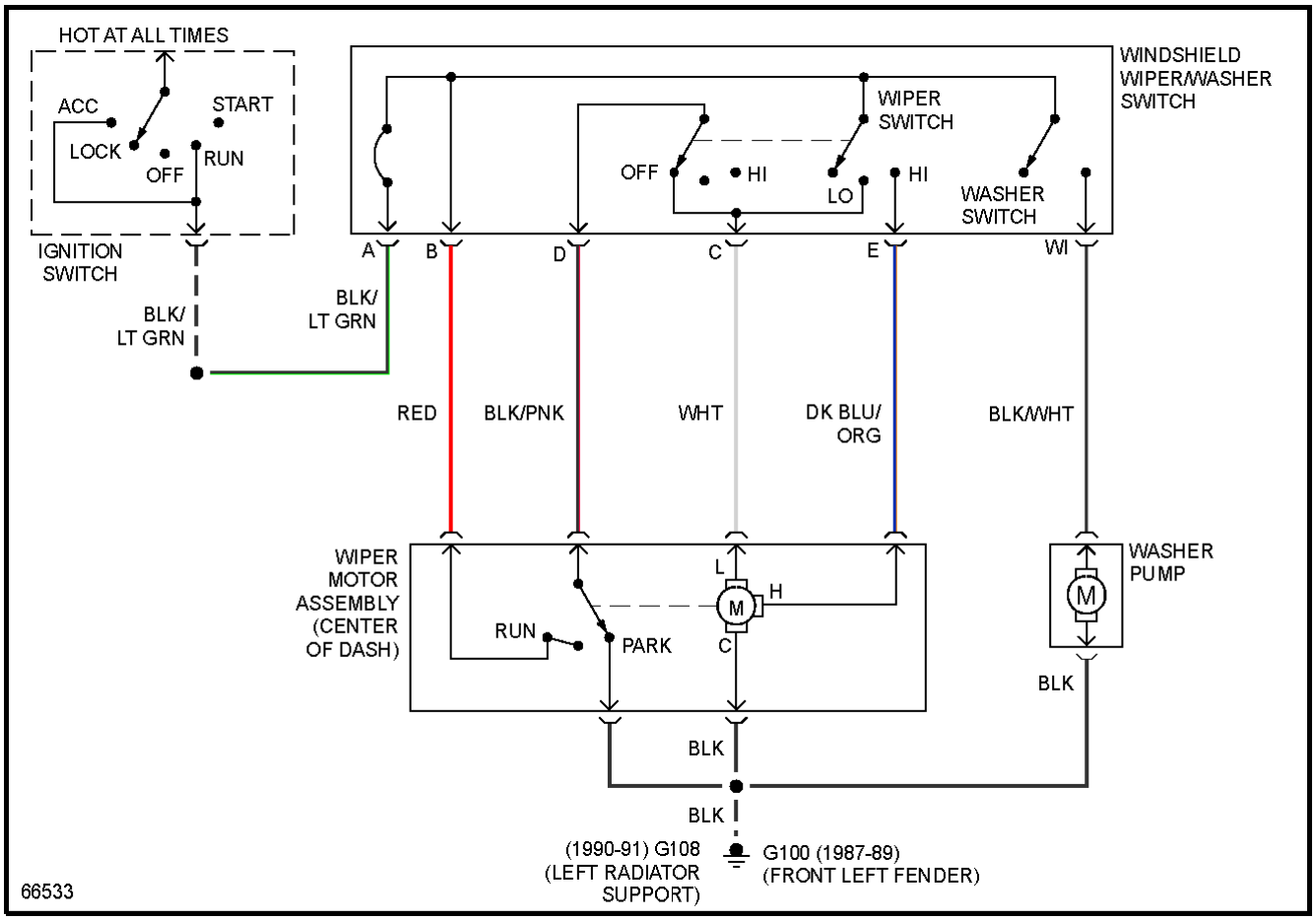


**Fig. 15: 2-Speed Wiper/Washer Circuit**

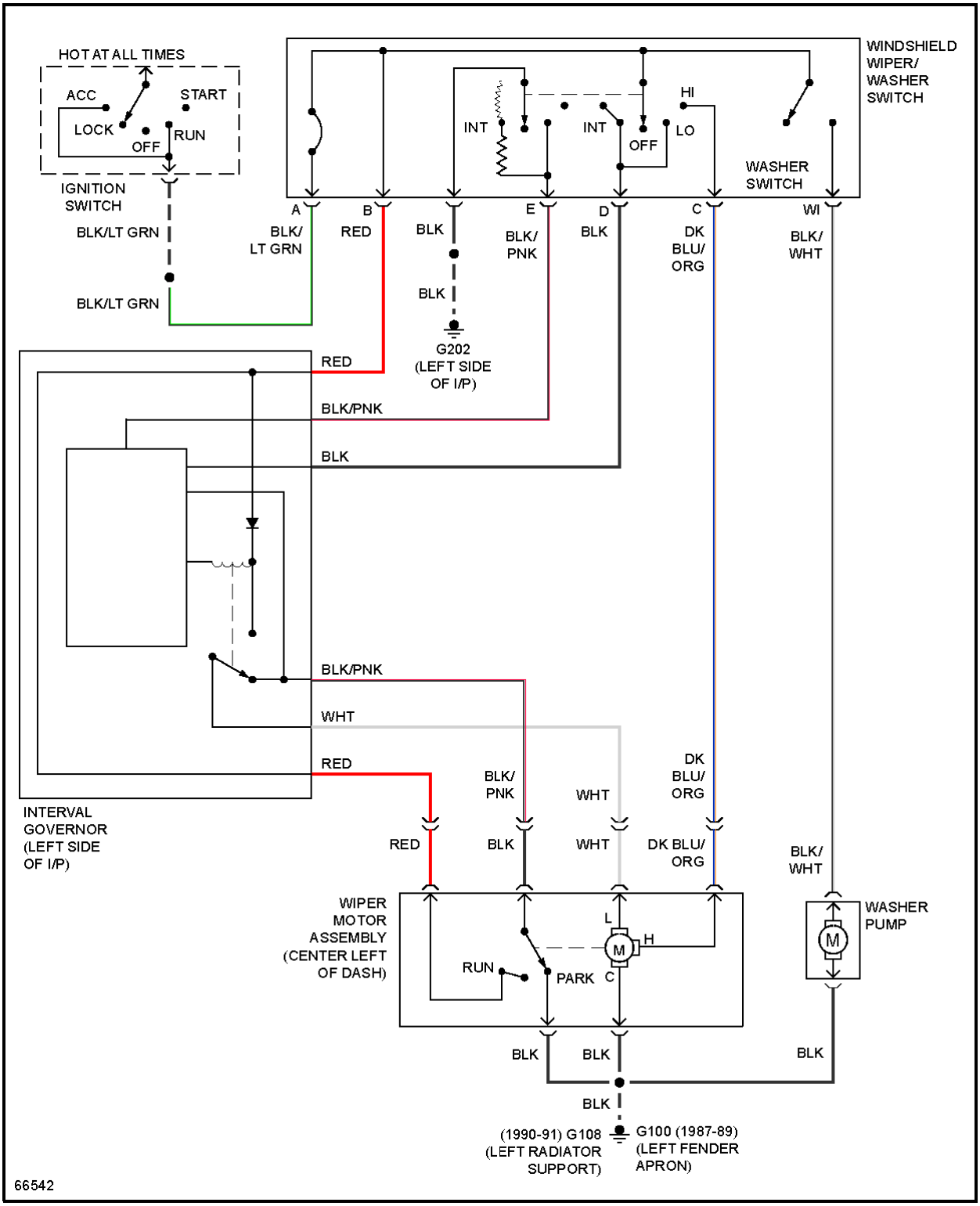


**Fig. 16: Interval Wiper/Washer Circuit**

## PART 2

**COMPONENT LOCATIONS**

| Component | Location (Figure No.) |
|---|---|
| A/C CLUTCH RESISTOR DIODE | E 30 (8) |
| A/C COMP CLUTCH | E 29 (8) |
| A/C/HEATER FUNCTION SELECTOR SWITCH | E 28 (8) |
| ALTERNATOR (DIESEL) | C 2 (1) |
| ALTERNATOR (DIESEL, 165 AMP) | D 3 (1) |
| ALTERNATOR (GAS) | B 3 (1) |
| BACK-UP LIGHT SWITCH | D 20 (6) |
| BACK-UP/NEUTRAL SAFETY SWITCH (A/T) | A 26-27 (7) |
| BATTERY | A 1 (1) |
| BEAM SELECT SWITCH | E 20 (6) |
| CAB MARKER LIGHTS | A 38 (10) |
| CARGO LIGHT | D 33, E 35 (9) |
| CHARGE IND RELAY (DIESEL) | D 2 (1) |
| CIGAR LIGHTER | C 23 (6) |
| CLUTCH INTERLOCK SWITCH (M/T) | A 24 (7) |
| CLUTCH INTERLOCK SWITCH JUMPER (A/T) | B 27 (7) |
| CONN C300 | D 33 (9) |
| COURTESY LIGHTS | D-E 33-35 (9) |
| CRUISE CONTROL | D-E 24-27 (7) |
| DIR FLASHER | D 21 (6) |
| DIR/HAZARD SWITCH | C 24-25 (7) |
| DISISTRIBUTOR | A 7, A 11, A 15 (2) (3) (4) |
| DOOR SWITCHES | C 33-34 (9) |
| DUEL BRAKE WARNING DIODE/RESISTOR | B 33 (9) |
| E4OD TRANS | E 4, E 9, E 12, E 17 (2,3,4,5) |
| EEC POWER RELAY | A 4, A 8, A 12 (1) (3) 4) |
| ELECT ENGINE CONTROL (EEC) (4.9L) | B-E 4 (2) |
| ELECT ENGINE CONTROL (EEC) (5.0L/5.8L) . B-E 8 (3) | |
| ELECT ENGINE CONTROL (EEC) (7.5L) | B-E 12 (4) |
| ELECTRONIC SHIFT CONTROL MODULE | A-B 35 (9) |
| ENGINE COMPARTMENT LIGHT | A 1 (1) |
| FLUID LEVEL SWITCH | C 32 (9) |
| FUEL PUMP RELAY | A 5, A 9, A 13 (2) (3) (4) |
| FUEL TANK SELECT SWITCH (DIESEL) | B-C 31 (8) |
| | |

| | |
|---|---|
| FUEL TANK SELECT SWITCH (GAS) | A 31 (8) |
| FUEL TANK SELECT VALVE (DIESEL) | B 31 (8) |
| FUEL TANK SENDER (DIESEL) | E 37 (10) |
| FUEL TANK UNIT (GAS W/ DUAL TANKS) | C-D 38 (10) |
| FUEL TANK UNIT (SINGLE TANK) | E 37 (10) |
| FUEL WATER SWITCH | D 31 (8) |
| FUS LINK Z | A 18-19 (5) |
| FUS LINKS | A 2-3, B-C 2, C 3 (1) |
| FUSE BLOCK | C 21-22 (6) |
| GLOVE BOX LIGHT | C 34 (9) |
| GLOW PLUG CONTROLLER | B 19 (5) |
| HAZARD FLASHER | D 24 (7) |
| HEATER FUNCTION SELECTOR SWITCH | D 30 (8) |
| HEGO SENSOR | C 7, C 11, C 15 (3) (4) |
| HORN RELAY | D 25-26 (7) |
| HORN RELAY JUMPER | E 26 (7) |
| IGN SUPPRESS RESISTOR | B 6, B 10, B 14 (2,3,4) |
| IGNITION COIL | A 7, A 11, B 15 (2) (3) (4) |
| IGNITION SWITCH | A 21-23 (6) |
| ILLUM LIGHTS | B 20 (6) |
| INERTIA SWITCH (DUAL TANKS) | A 31 (8) |
| INERTIA SWITCH (SINGLE TANKS) | D 38, E 38 (10) |
| INSTRUMENT CLUSTER | A-C 28 (8) |
| INTERVAL GOVERNOR | C 26 (7) |
| LEFT DOOR SWITCH | C 33 (9) |
| LOW VACUUM WARNING (DIESEL) | C 31 (8) |
| MAIN LIGHT SWITCH | D-E 23 (6) |
| MANUAL LEVER POSITION SENSOR | |
| (MLPS) | B 7, B 11, B 15, C 19, A 25 (2,3,4,5,7) |
| MAP/DOME LIGHTS | E 33, E 35 (9) |
| OVERDRIVE SW | E 6-7,10-11,14-15, C 18 (2,3,4,5) |
| PARK BRAKE SWITCH | B 33 (9) |
| POWER DOOR LOCKS | C-E 32 (9) |
| POWER WINDOW SWITCH | B-C 36-37 (10) |
| RABS SYSTEM | A-B 32-33 (9) |
| RADIO (PARTIAL) | C-D 35 (9) |
| REAR DEFOGGER SWITCH | A 36 (10) |
| SEAT BELT SWITCH | E 21 (6) |
| SELF TEST OUTPUT | |
| CONNECTOR | C 7, C 11, C 15, E 19 (2,3,4,5) |

| | |
|---|---|
| STARTER RELAY (DIESEL) | B-C 3 (1) |
| STARTER RELAY (GAS) | A 3 (1) |
| STOP LIGHT SWITCH | E 24 (7) |
| TAILGATE WINDOW SWITCH | D-E 36 (10) |
| TECA POWER RELAY | E 19 (5) |
| TRAILER CONN | B 39, C 39 (10) |
| TRAILER ELECT BRAKE CONTROL CONN | C 38 (10) |
| TRAILER/MARKER LIGHT RELAY | B 38 (10) |
| TRANSMISSION ELECT CONTROL ASSY (TECA) | |
| (DIESEL) | B-E 16 (5) |
| VEHICLE SPEED | |
| SENSOR | B 4, B 8, B 12, A 16 (2,3,4,5) |
| VOLTAGE REGULATOR (DIESEL) | D 2 (1) |
| WARNING CHIME MODULE | E 22 (6) |
| WARNING INDS (DIESEL) | D 30 (8) |
| WASHER MOTOR | E 1 (1) |
| WIPER MOTOR | E 1 (1) |
| WIPER/WASHER SWITCH (INTERVAL) | D 26-27 (7) |
| WIPER/WASHER SWITCH (STANDARD) | E 3 (1) |
| 4WD IND SWITCH | B 29-30 (8) |
| 4WD SHIFT CONTROL SWITCH | A 33-34 (9) |

**Fig. 1: Engine Compartment & Headlights (Grids 1-3)**

1991 Ford Pickup F-Series

**COMPONENT LOCATOR:**


A/C CLUTCH RESISTOR DIODE ..... E 30
A/C COMP CLUTCH ..... E 29
A/C/HEATER FUNCTION SELECTOR SW ..... E 28
ALTERNATOR (DIESEL) ..... C 2
ALTERNATOR (DIESEL, 165 AMP) ..... D 3
ALTERNATOR (GAS) ..... B 3
BACK-UP LT SW ..... D 20
BACK-UP/NEUTRAL SAFETY SW (A/T) ..... A 26-27
BATTERY ..... A 1
BEAM SELECT SW ..... E 20
CAB MARKER LTS ..... A 38
CARGO LT ..... D 33, E 35
CHARGE IND RELAY (DIESEL) ..... D 2
CIG LTR ..... C 23
CLUTCH INTERLOCK SW (M/T) ..... A 24
CLUTCH INTERLOCK SW JUMPER (A/T) ..... B 27
CONN C300 ..... D 33
COURTESY LTS ..... D-E 33-35
CRUISE CONTROL ..... D-E 24-27
DIR FLASHER ..... D 21
DIR/HAZ SW ..... C 24-25
DISTRIBUTOR ..... A 7, A 11, A 15
DOOR SWS ..... C 33-34
DUAL BRAKE WARNING DIODE/RESISTOR ..... B 33
E4OD TRANSMISSION ..... E 4, E 9, E 12, E 17
EEC POWER RELAY ..... A 4, A 8, A 12
ELECT ENGINE CONTROL (EEC) (4.9L) ..... B-E 4
ELECT ENGINE CONTROL (EEC) (5.0L & 5.8L) ..... B-E 8
ELECT ENGINE CONTROL (EEC) (7.5L) ..... B-E 12
ELECTRONIC SHIFT CONTROL MODULE ..... A-B 35
ENGINE COMPT LT ..... A 1
FLUID LEVEL SW ..... C 32
FUEL PUMP RELAY ..... A 5, A 9, A 13
FUEL TANK SELECT SW (DIESEL) ..... B-C 31
FUEL TANK SELECT SW (GAS) ..... A 31
FUEL TANK SELECT VALVE (DIESEL) ..... B 31
FUEL TANK SENDER (DIESEL) ..... E 37
FUEL TANK UNIT (GAS W/ DUAL TANKS) ..... C-D 38
FUEL TANK UNIT (SINGLE TANK) ..... E 37
FUEL WATER SW ..... D 31
FUS LINK Z ..... A 18-19
FUS LINKS ..... A 2-3, B-C 2, C 3
FUSE BLOCK ..... C 21-22
GLOVE BOX LT ..... C 34
GLOW PLUG CONTROLLER ..... B 19
HAZARD FLASHER ..... D 24
HEATER FUNCTION SELECTOR SW ..... D 30
HEGO SENSOR ..... C 7, C 11, C 15
HORN RELAY ..... D 25-26
HORN RELAY JUMPER ..... E 26
IGN SUPPRESSION RESISTOR ..... B 6, B 10, B 14
IGNITION COIL ..... A 7, A 11, B 15
IGNITION SW ..... A 21-23
ILLUM LTS ..... B 20
INERTIA SW (DUAL TANKS) ..... A 31
INERTIA SW (SINGLE TANK) ..... D 38, E 38
INSTRUMENT CLUSTER ..... A-C 28
INTERVAL GOVERNOR ..... C 26
LEFT DOOR SW ..... C 33
LOW VACUUM WARNING (DIESEL) ..... C 31
MAIN LT SW ..... D-E 23
MANUAL LEVER POSITION SENSOR (MLPS) ..... B 7/B 11/B 15/C 19/A 25
MAP/DOME LTS ..... E 33, E 35
OVERDRIVE SW ..... E 6-7, E 10-11, E 14-15, C 18
PARK BRAKE SW ..... B 33
POWER DOOR LOCKS ..... C-E 32
POWER WINDOW SW ..... B-C 36-37
RABS SYSTEM ..... A-B 32-33
RADIO (PARTIAL) ..... C-D 35
REAR DEFOGGER SW ..... A 36
SEAT BELT SW ..... E 21
SELF TEST OUTPUT CONN ..... C 7, C 11, C 15, E 19
STARTER RELAY (DIESEL) ..... B-C 3
STARTER RELAY (GAS) ..... A 3
STOP LT SW ..... E 24
TAILGATE WINDOW SW ..... D-E 36
TECA POWER RELAY ..... E 19
TRAILER CONN ..... B 39, C 39
TRAILER ELECT BRAKE CONTROL CONN ..... C 38
TRAILER/MARKER LT RELAY ..... B 38
TRANSMISSION ELECT CONTROL ASSY (TECA) (DIESEL) ..... B-E 16
VEHICLE SPEED SENSOR ..... B 4, B 8, B 12, A 16
VOLTAGE REGULATOR (DIESEL) ..... D 2
WARNING CHIME MODULE ..... E 22
WARNING INDS (DIESEL) ..... D 30
WASHER MOTOR ..... E 1
WIPER MOTOR ..... E 1
WIPER/WASHER SW (INTERVAL) ..... D 26-27
WIPER/WASHER SW (STANDARD) ..... E 3
4WD IND SW ..... B 29-30
4WD SHIFT CONTROL SW ..... A 33-34


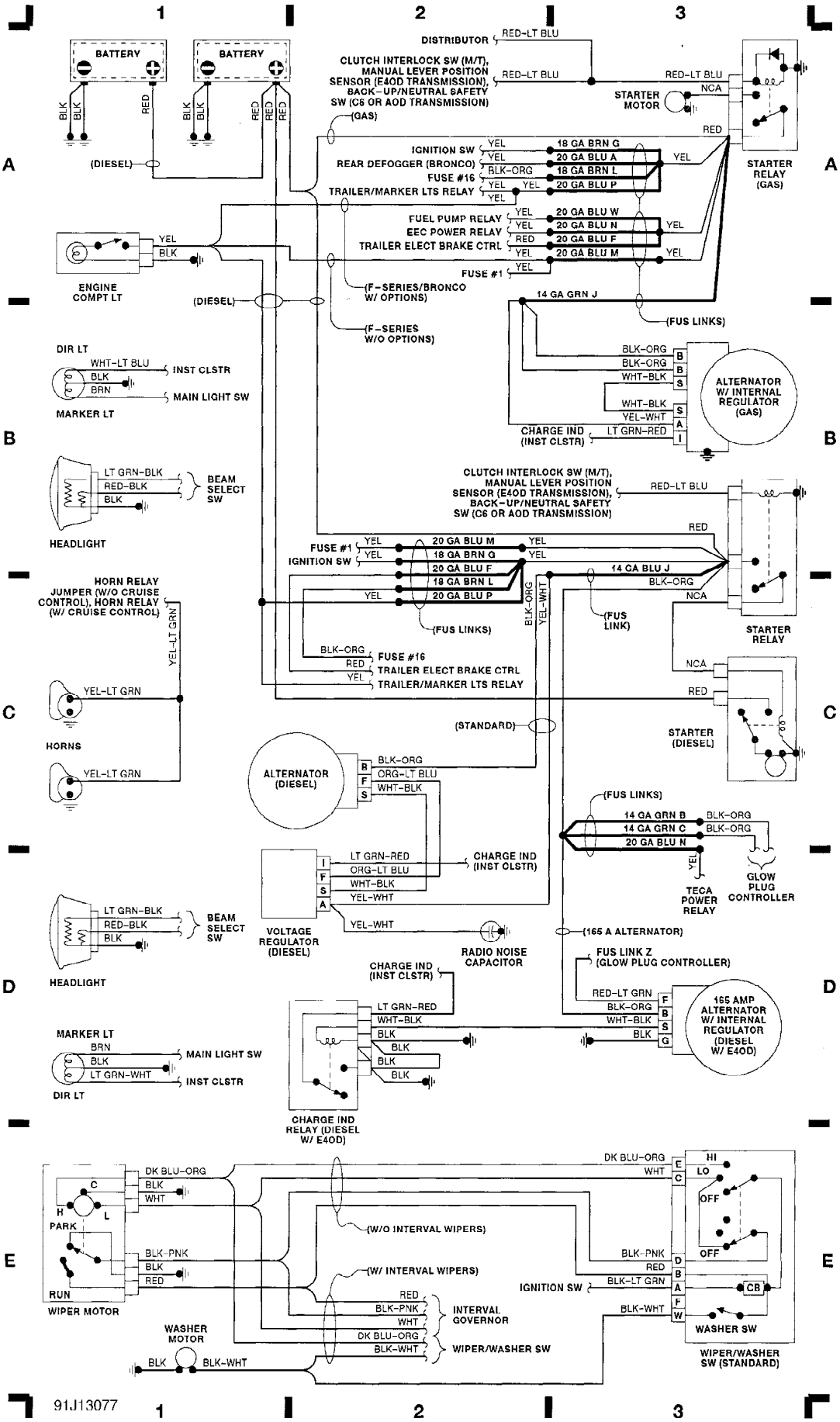

**Fig. 2: Electronic Engine Control (EEC) (4.9L) (Grids 4-7)**

1991 Ford Pickup F-Series

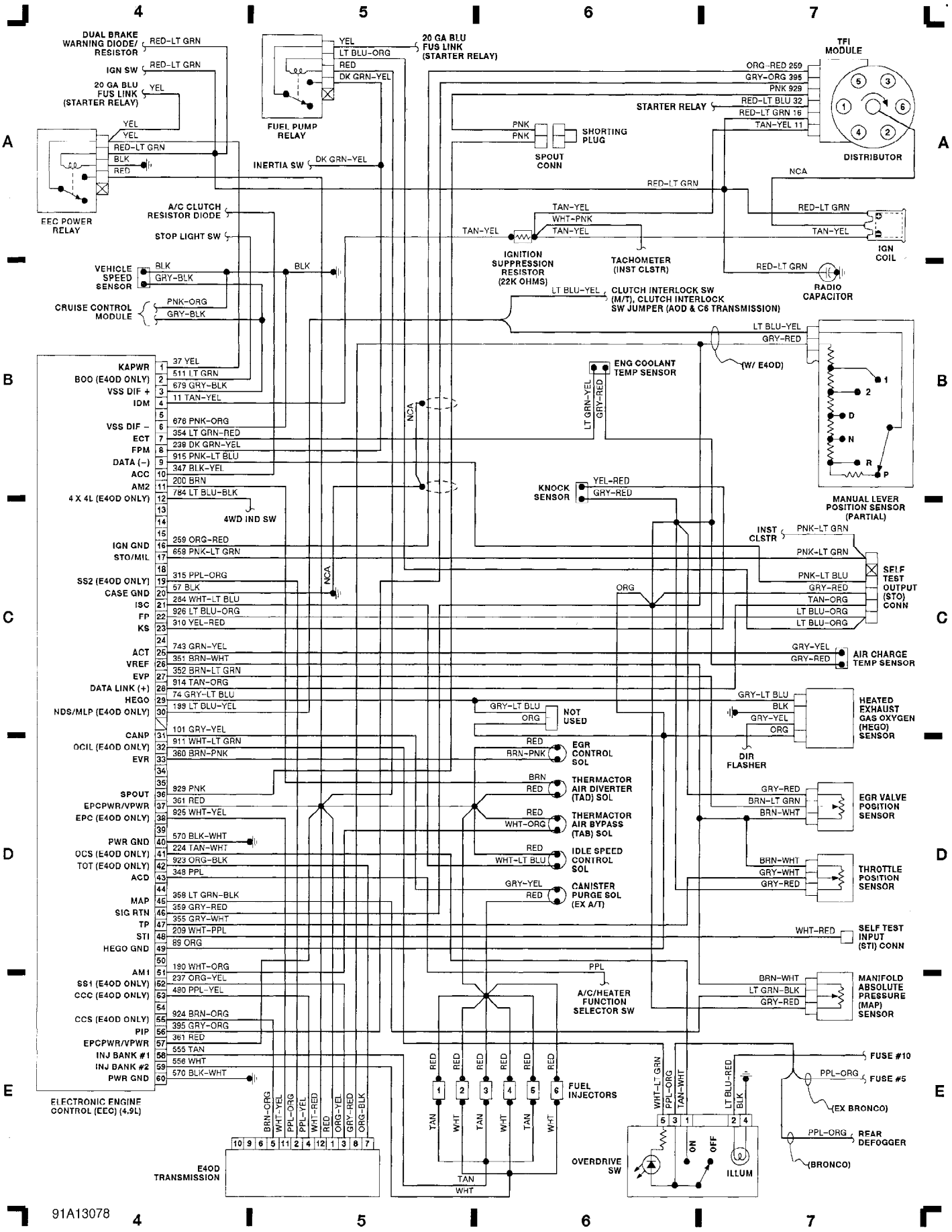

**Fig. 3: Electronic Engine Control (EEC) (5.0L & 5.8L EFI) (Grids 8-11)**

1991 Ford Pickup F-Series

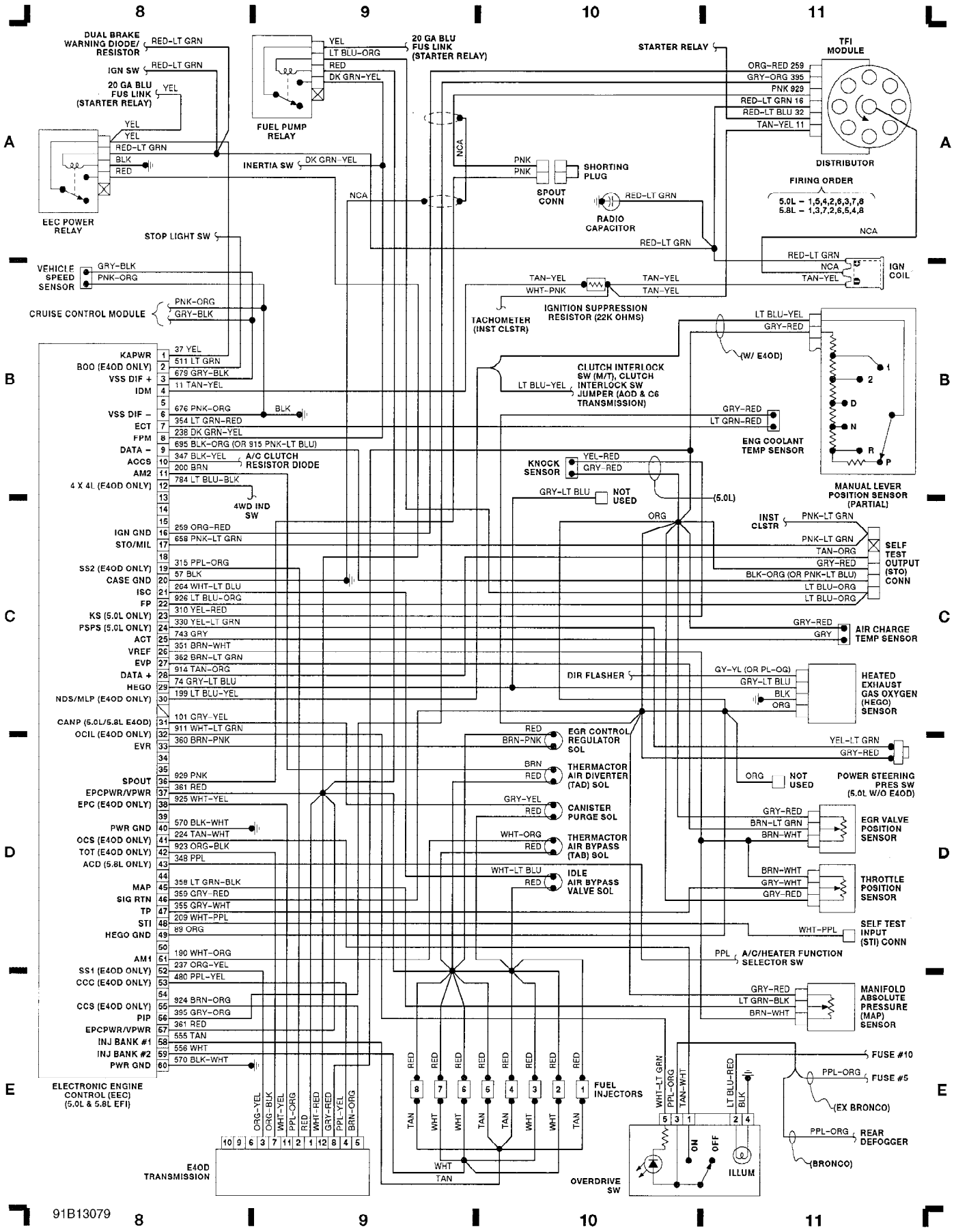


91B13079

**Fig. 4: Electronic Engine Control (EEC) (7.5L EFI) (Grids 12-15)**

1991 Ford Pickup F-Series

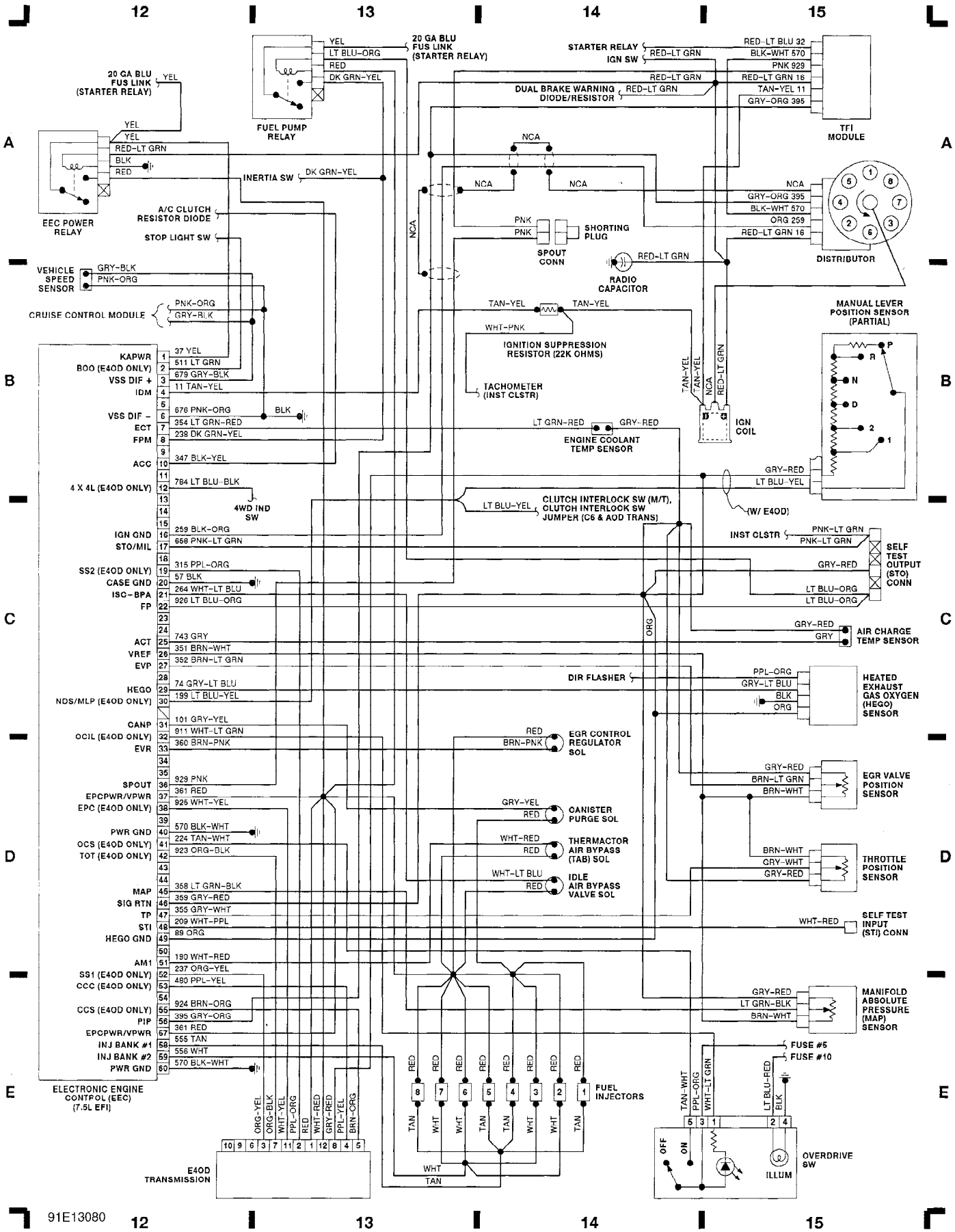


91E13080

**Fig. 5: Transmisssion Electronic Control Assembly (TECA) (Diesel W/ E4OD) (Grids 16-19)**

1991 Ford Pickup F-Series

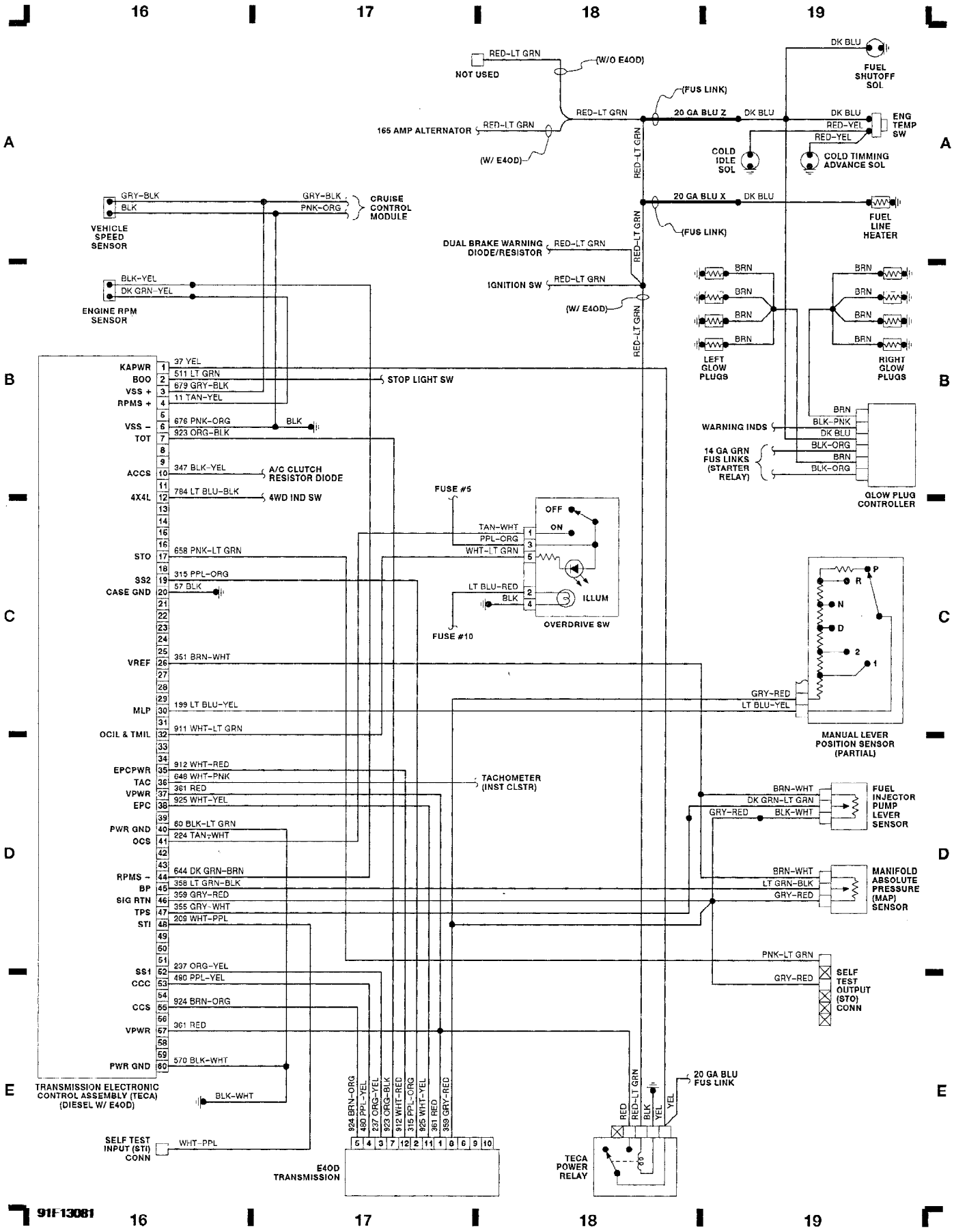

**Fig. 6: Fuse Block (Grids 20-23)**

1991 Ford Pickup F-Series

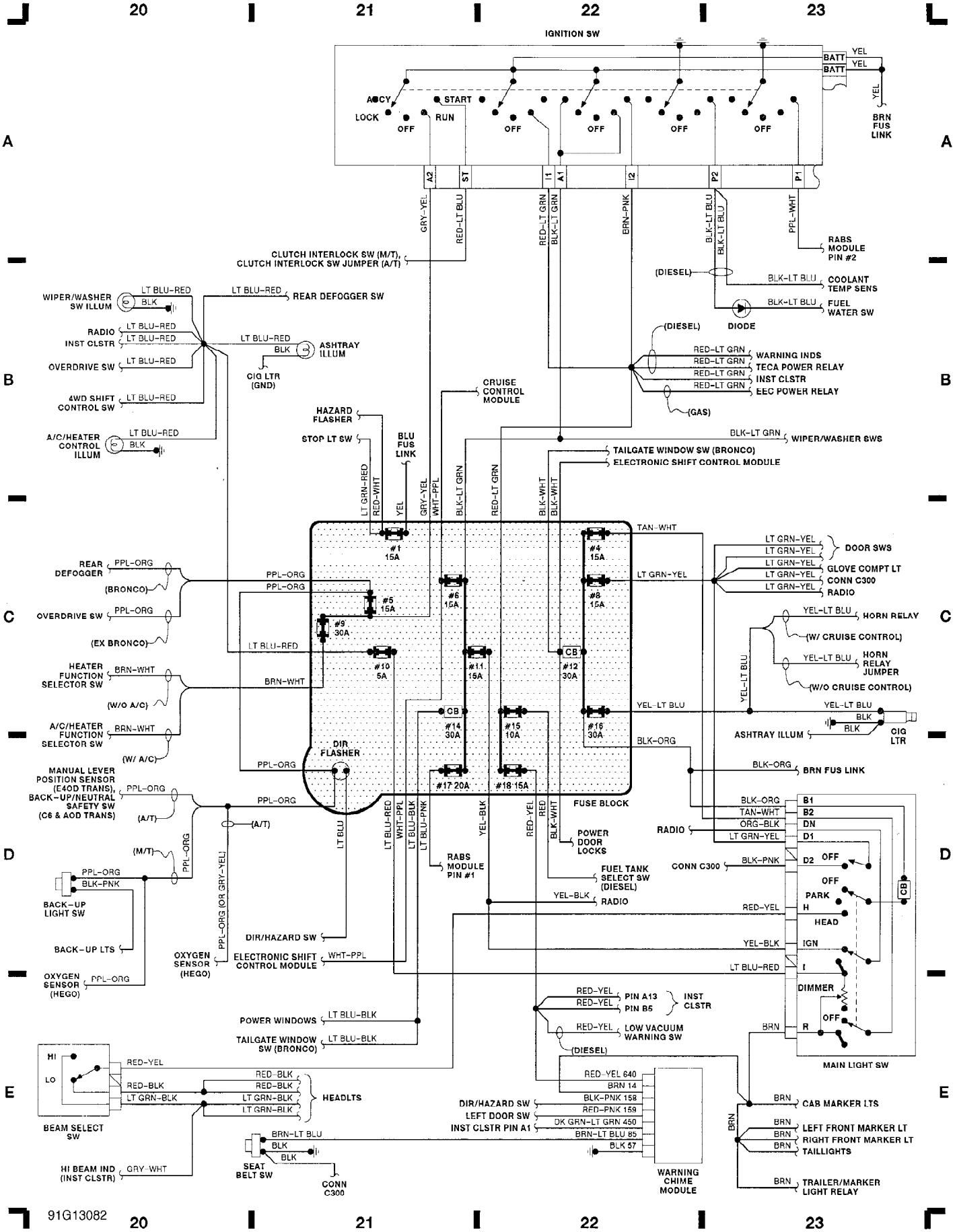

**Fig. 7: Clutch Interlock, Cruise Control & Wiper/Washer (Grids 24-27)**

1991 Ford Pickup F-Series

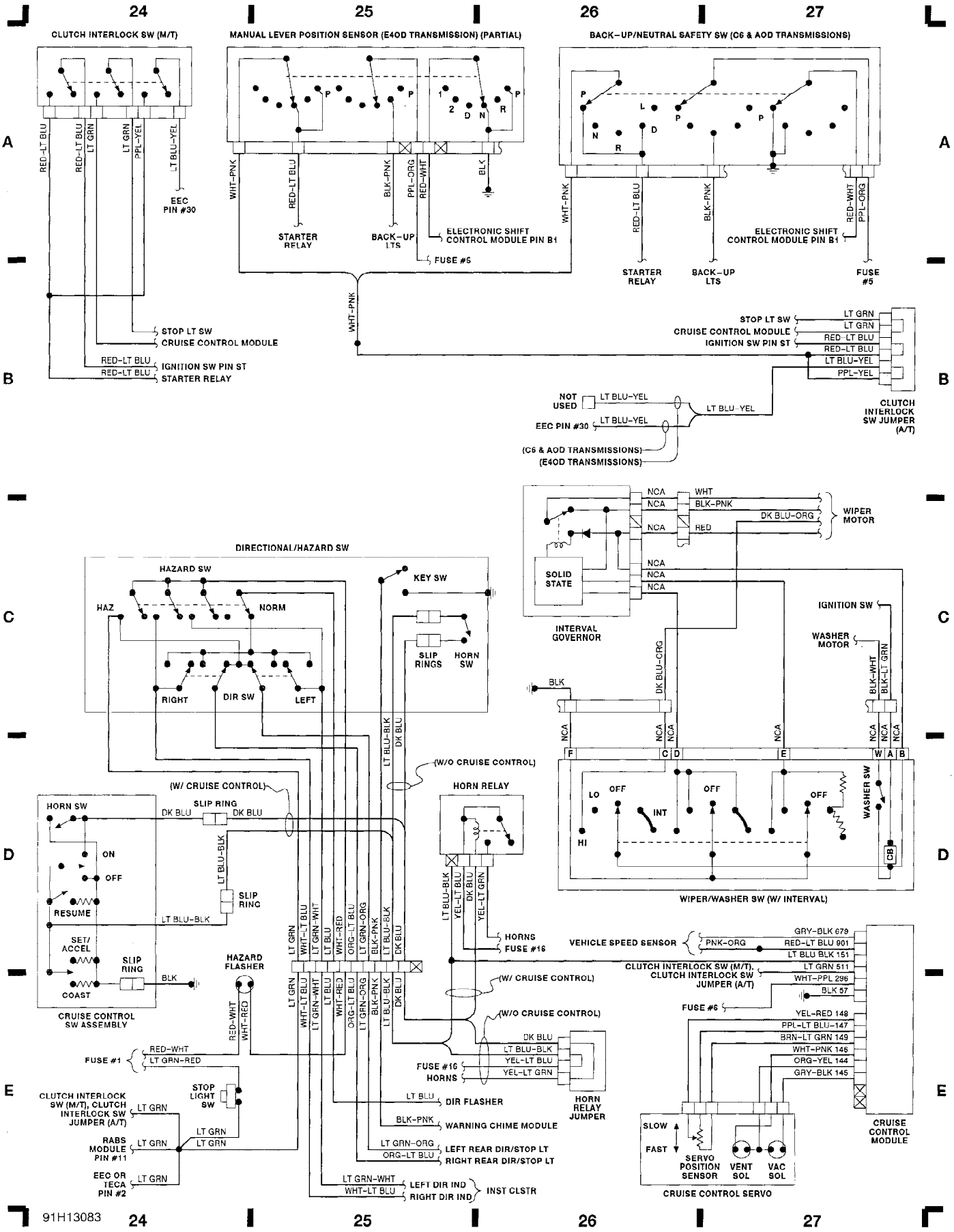

**Fig. 8: Instrument Cluster & A/C Heater Function (Grids 28-31)**

1991 Ford Pickup F-Series

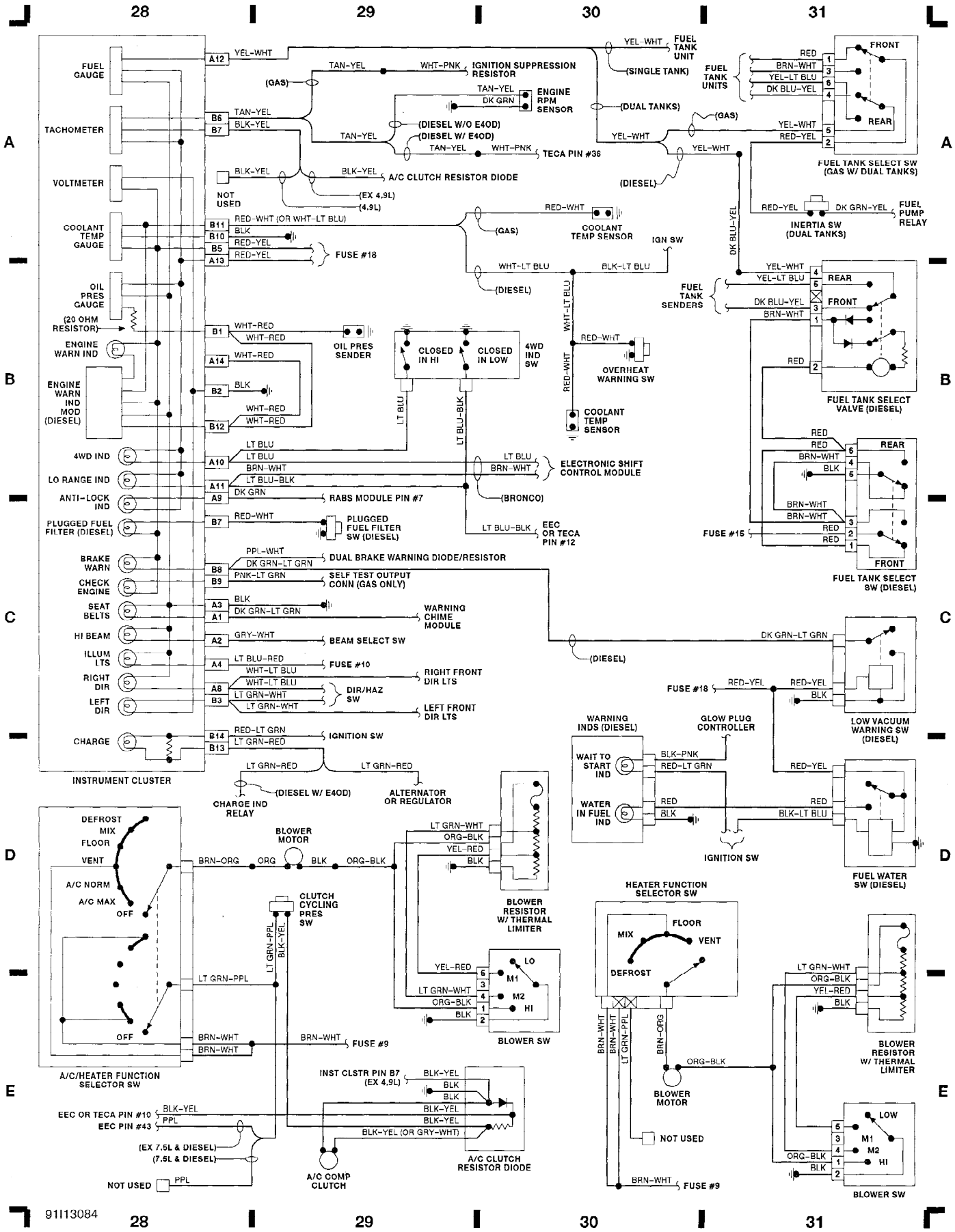

**Fig. 9: Electronic Shift Control & Passenger Compartment (Grids 32-35)**

1991 Ford Pickup F-Series

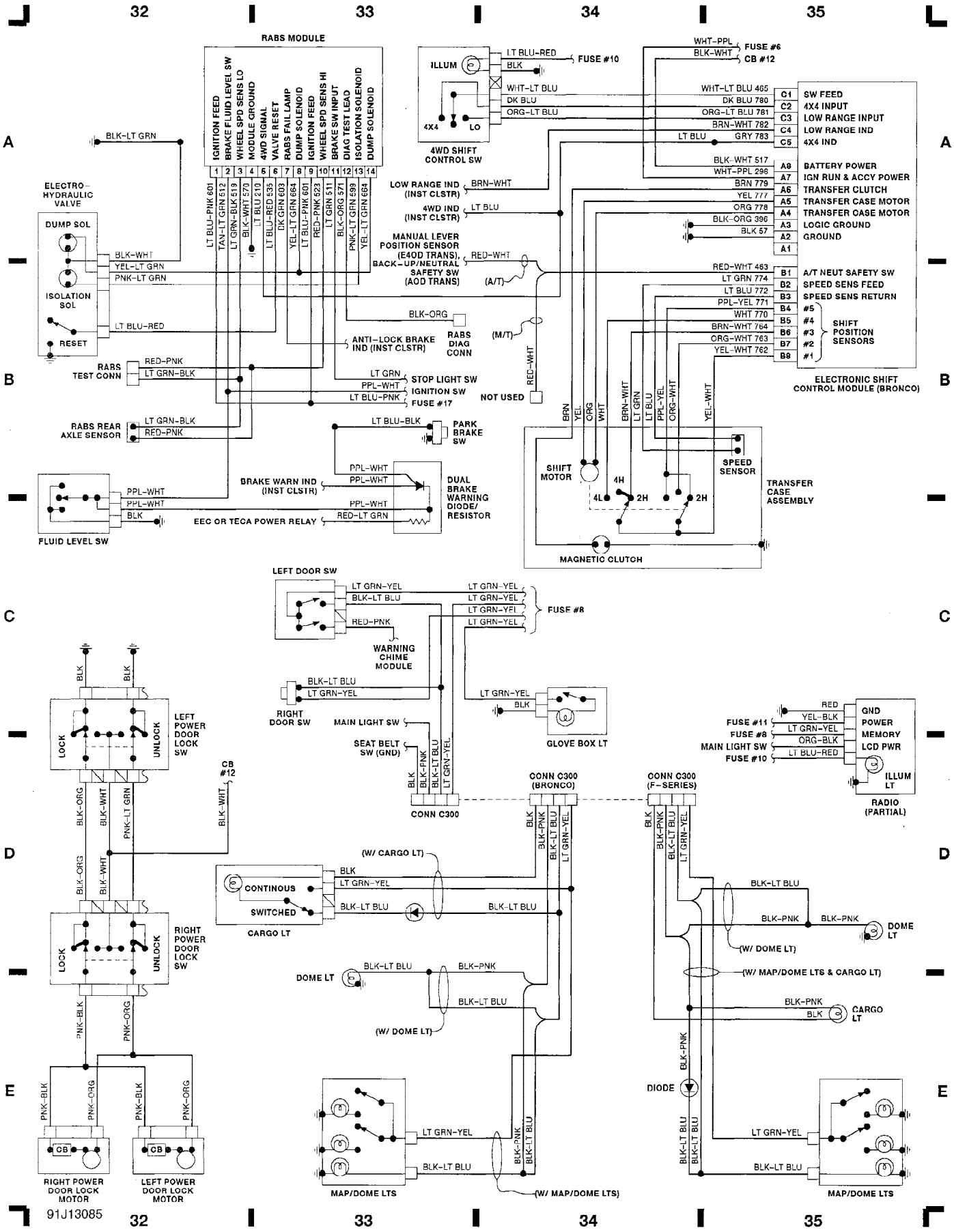

**Fig. 10: Passenger Compartment & Taillights (Grids 36-39)**
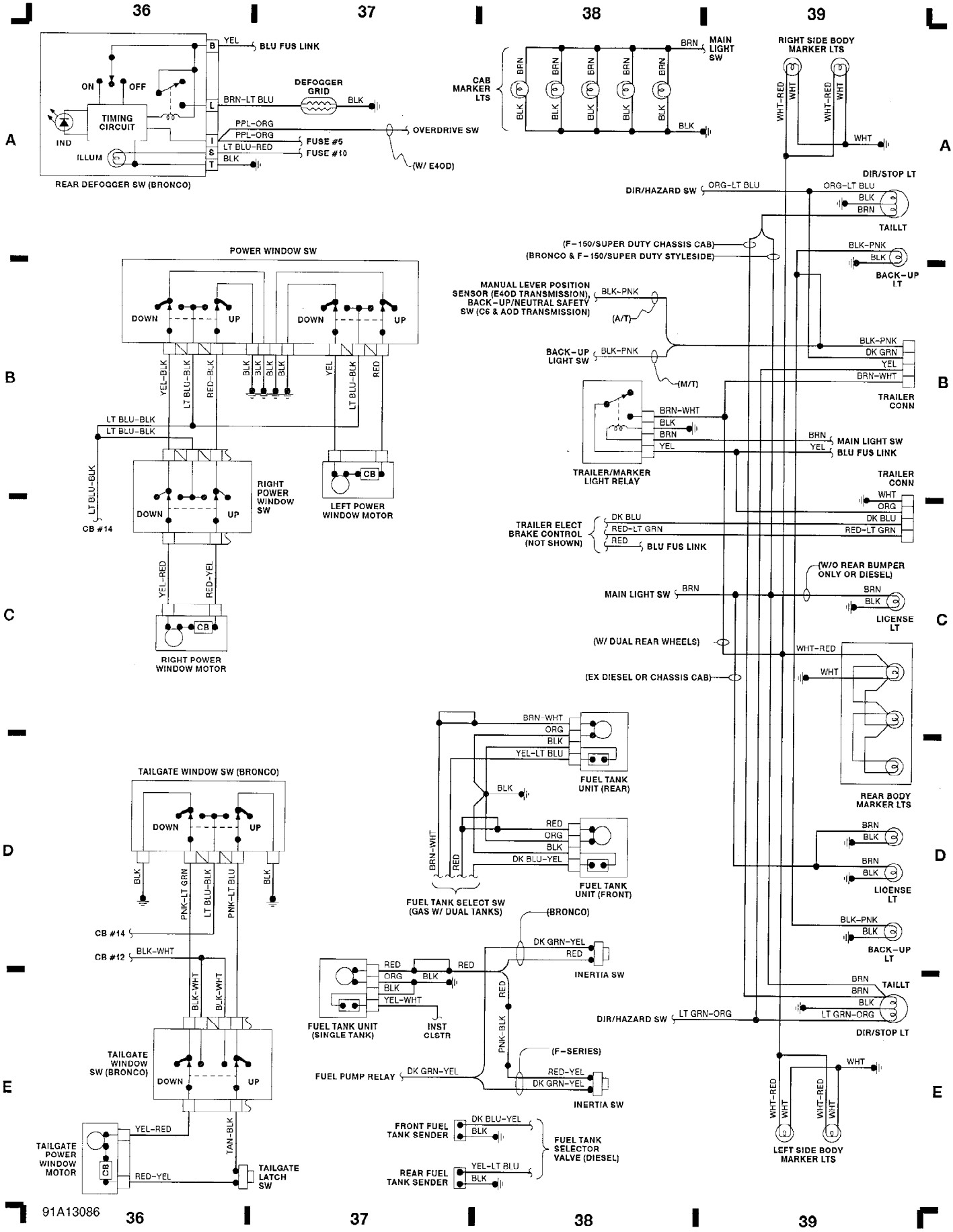
1991 Ford Pickup F-Series